Quality ● Safety ● Transparency

Air Motor and Planetary Gear Technology

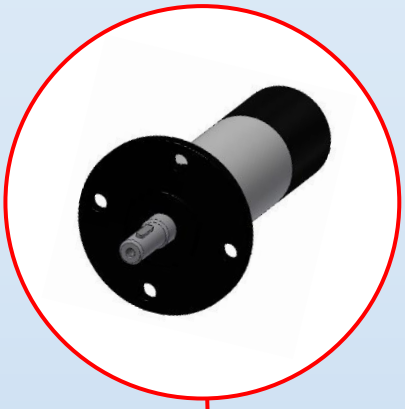

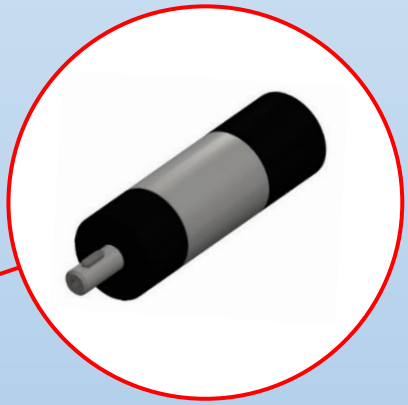

AIR vogel tec®

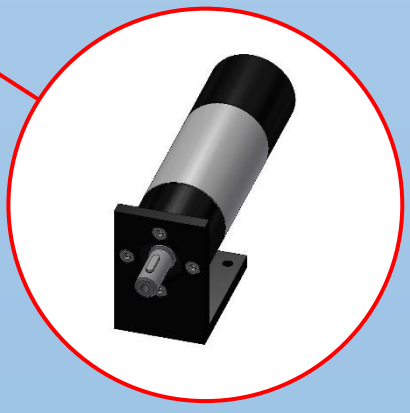

Product Catalog Air Motors

Air motors

The technical features and characteristics of our special **AT / LAT / VAT** series make these drives indispensable in nearly all industries. Air motors are insensitive to electrical interference and do not cause any themselves.

At AIR-tec-Vogel® GmbH, we supply OEMs with air motors customized to their specifications. Our loyal customers appreciate our experience, flexibility and innovation and all that in a consistently high quality (Made in Germany).

The number of times air motors made by AIR-tec-Vogel® GmbH can be started and stopped is unlimited: **"100 percent duty cycle with maximum performance."** The torque and speed as well as the direction of rotation are easy to change, which is typical for compressed air. Speed and torque characteristics are easily regulated via air pressure or air flow. The need for complex and expensive control mechanisms with reserves like those used with electric drives is eliminated.

In the event of overload, the speed will drop only to where a balance is reached between the required torque and the speed, making it ideal for many applications even under conditions that are hazardous or harmful to humans. Air pressure is higher on each motor part than in the surrounding area.

AIR-tec-Vogel® GmbH motors start smoothly, which reduces the load on the drive components. A special feature is our shaft seal that prevents dirt particles from entering or escaping.

Quality ● Safety ● Transparency

A 100% inspection is performed on air motors made by AIR-tec-Vogel® GmbH. All air motors are tested thoroughly for performance and smoothness of operation before delivery.
We deliver and provide services to help you achieve the highest possible productivity and efficiency and ensure long-term quality and reliability.

Our quality management system (QMS) has been certified by TÜV Süd to the new ISO 9001:2015 regulations.

The guidelines included in this catalog are intended to provide you with detailed technical information to help you design your system.

We have the right solution for your requirements.

Just talk to our experts about your application and we'll tell you all you need to know.

Subject to technical changes **All dimensions are in mm**

www.air-tec-vogel.de ● Email: info@air-tec-vogel.de

Phone: +49 6406/7758483 ● Fax +49 6406/7758481

AIR-tec-Vogel GmbH ● Brunnenstraße 48 ● 35460 Staufenberg (Germany)

Choosing the right motor

1. Defining the right specifications

The load on air motors that are **not** stall-proof (**LAT and VAT series**) must not exceed the **maximum** permissible torque, and motors should be protected from overload by means of an **overload clutch** or a **torque limiter**.

Formulas

2. Calculating the required performance

- Is it a reversible motor = (U)
  or a counterclockwise or clockwise motor = (L / R)
- What torque is required at what speed?
- Is the motor stall-proof = (A)
  or **not** stall-proof = (N)

$$\textbf{Power} = \frac{\textbf{3.14 x M1(Nm) x n1 rpm}}{\textbf{30}}$$

$$\textbf{Nm} = \frac{\textbf{power (watts) x 30}}{\textbf{3.14 x n1 rpm}}$$

Example: Power = ? load torque = 10 Nm and load speed = 300 rpm

$$\textbf{Power} = \frac{\textbf{3.14 x 10 Nm x 300 rpm}}{\textbf{30}} \textbf{ = 314 watts}$$

As can be seen in the example above, the result is a minimum power of 314 watts. Potential motor variants include AT-UA-420 and AT-UA-550 watts.

Energy efficiency

The air motor's nominal speed (also called operating speed) should be as close as possible to the required nominal speed of 300 rpm. Based on these factors, your choice of suitable motors can be restricted to the AT-UA-420/310 and AT-UA-550/275 types.
Once you have found the right motor, it can be adapted to your requirements by an additional adjustment of the air pressure.

www.air-tec-vogel.de ● Email: info@air-tec-vogel.de
Phone: +49 6406/7758483 ● Fax +49 6406/7758481
AIR-tec-Vogel GmbH ● Brunnenstraße 48 ● 35460 Staufenberg (Germany)

Determining the right operating pressure

A motor's optimal pressure can be determined by entering the ratios $M1/M_{nenn}$ and $n1/n_{nenn}$ in the chart.

Type: AT-UA-400/240 M_{nenn} = 15.9 Nm, n_{nenn} = 240 rpm., M1 = 10 Nm, n1 = 300 rpm

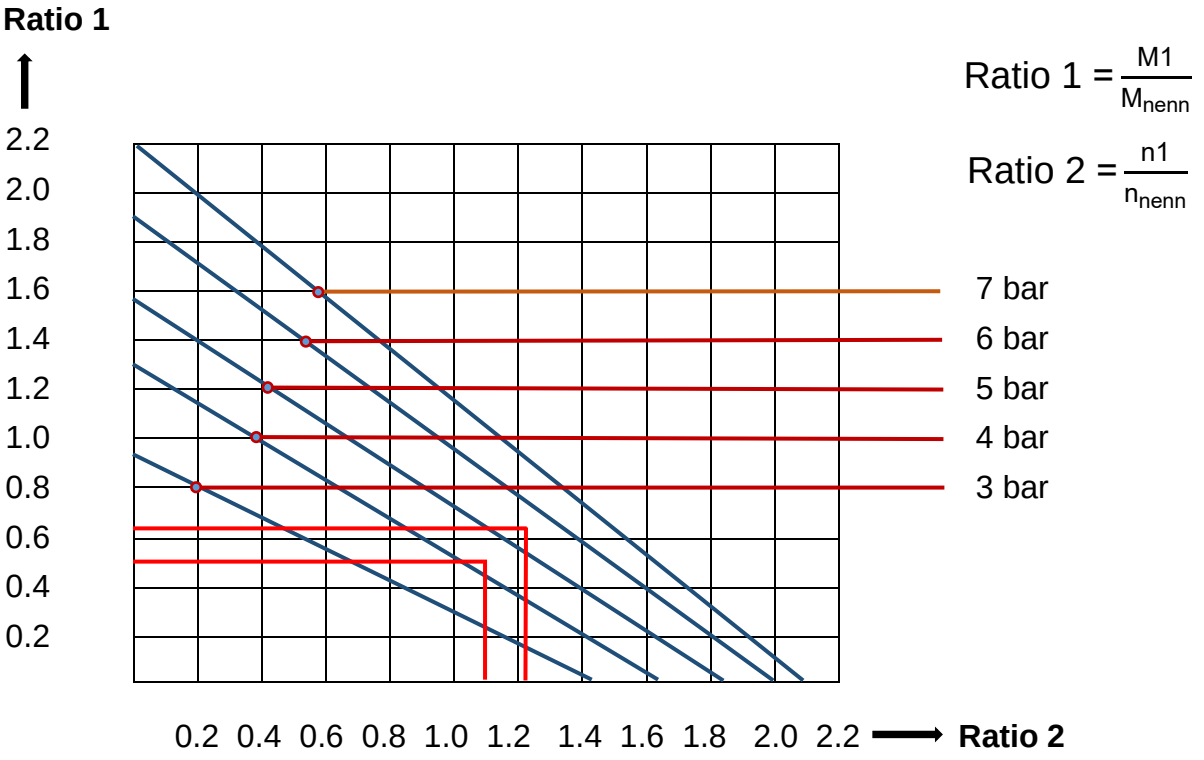

All technical data are indicated for an operating pressure of 6.0. Changes in air pressure will result in the following **reference values**:

Operating pressure	Power	Nominal speed	Nominal torque	Air consumption
7 bar	120%	104%	115%	115%
6 bar	100%	100%	100%	100%
5 bar	75%	96%	81%	81%
4 bar	55%	87%	63%	63%
3 bar	36%	75%	47%	47%

Subject to technical changes **All dimensions are in mm**

Performance diagram for 6.0 bar operating pressure

Speed and torque characteristics are easily regulated via air pressure or air flow.

"Optimal energy efficiency" refers to operation at nominal speed**.** This is the only way that the maximum compressed air power can be utilized.

Enter the technical data for the motor you have selected on the axes and then you will be able to read off all the intermediary stages.

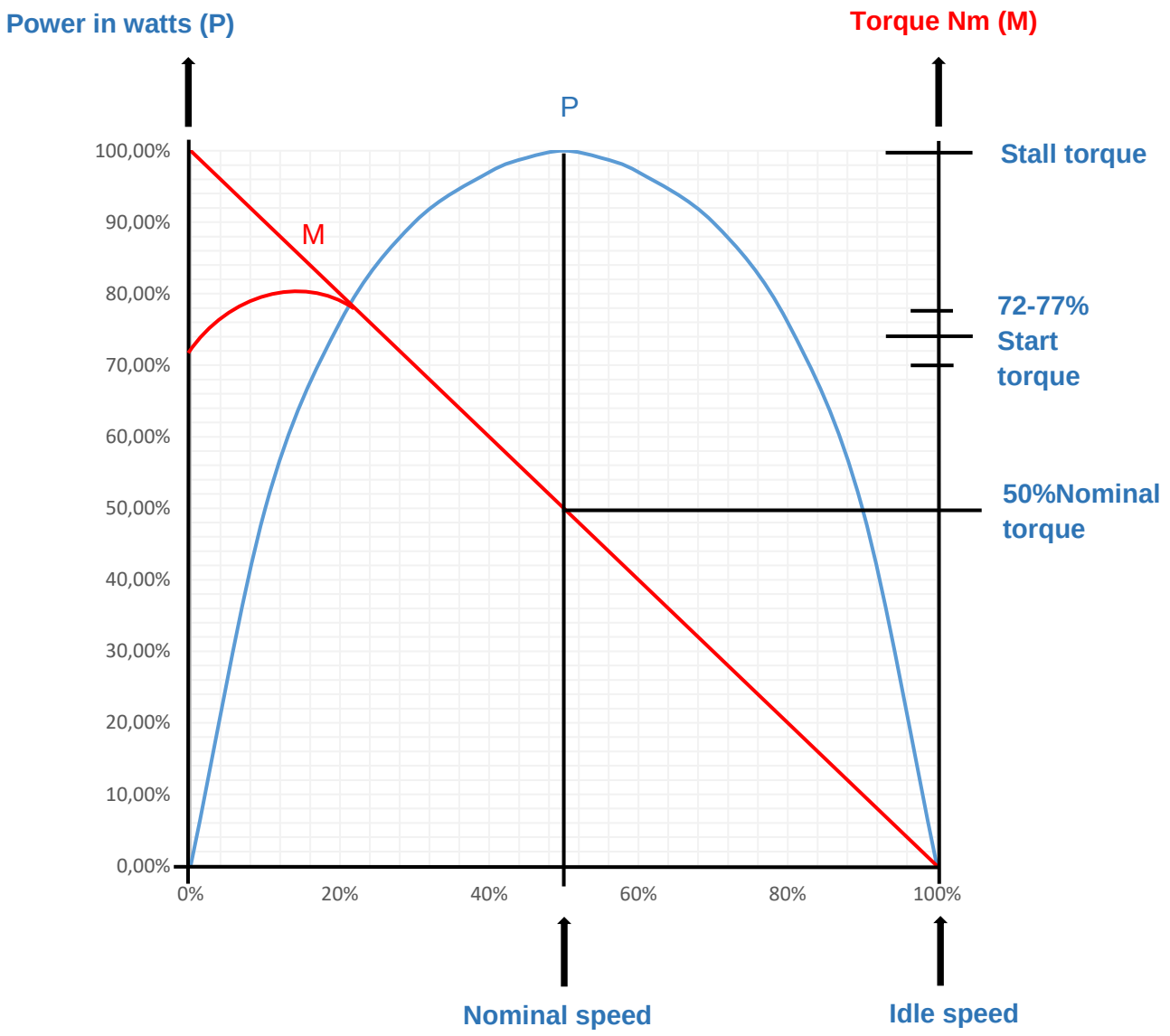

www.air-tec-vogel.de ● Email: info@air-tec-vogel.de
Phone: +49 6406/7758483 ● Fax +49 6406/7758481
AIR-tec-Vogel GmbH ● Brunnenstraße 48 ● 35460 Staufenberg (Germany)

Connections

1) Maintenance unit (filter with water separator, pressure regulator and lubricator)
2) Silencer
3) 2/2 way valve
4) Air motor

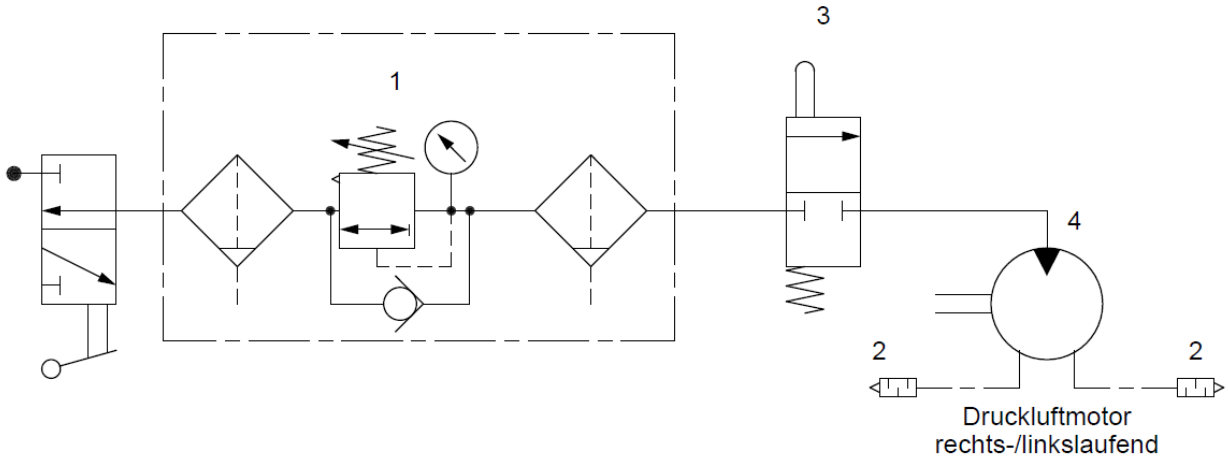

1) Maintenance unit (filter with water separator, pressure regulator and lubricator)
2) Silencer
3) 5/3 way valve
4) Air motor

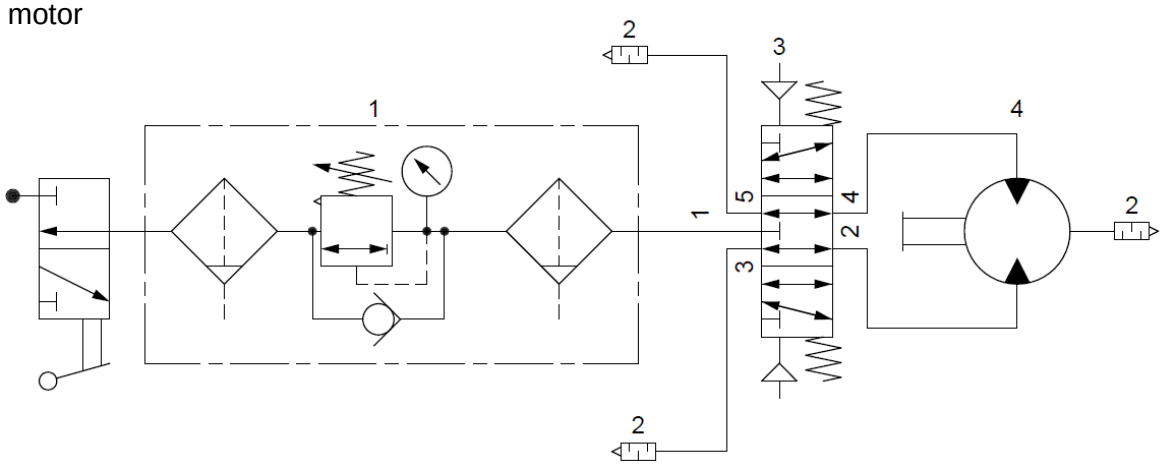

Control

A simple 2/2 way valve is required to regulate air motors with one direction of rotation. Air motors with two directions of rotation can also be controlled by a simple through valve if the motor contains an integrated manual reversal function. If it does not, a 5/3 way valve is required so that the rotor side to which **no** pressure is applied can be ventilated. Alternatively, two 3/2 way valves can be used. Always take care to ensure sufficient air flow when selecting your valves.

www.air-tec-vogel.de ● **Email:** info@air-tec-vogel.de
Phone: +49 6406/7758483 ● Fax +49 6406/7758481
AIR-tec-Vogel GmbH ● Brunnenstraße 48 ● 35460 Staufenberg (Germany)

Direction of Rotation

Non-reversible standard air motors are delivered with a clockwise direction unless otherwise specified in your order.

- **Clockwise** means that the drive shaft rotates in the "**clockwise"** direction if you are looking at the motor from the rear (base)

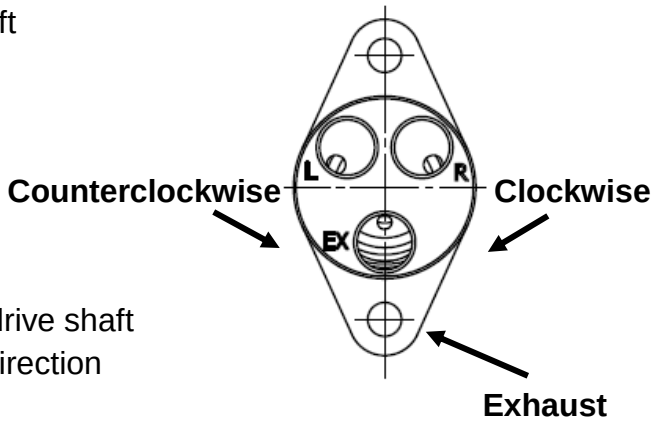

- **Counterclockwise** means that the drive shaft rotates in the "**counterclockwise"** direction if you are looking at the motor from the rear (base).

Motor throttling

- **Exhaust throttling** should be applied if you want to maintain a high torque and reduce the speed.
- **Air supply throttling** should be applied if you want to reduce the speed and the torque is secondary. The advantage here is that air consumption is reduced.
- For **reversible** air motors, only the air supply should be throttled because exhaust throttling would cause excessive power loss.

Output variants

Flange and mounting variants

Subject to technical changes

All dimensions are in mm

Built-in motors save space

AIR-tec-Vogel® GmbH offers **“space-saving”** built-in motors with and without gearboxes. These motors can be integrated into devices, spindles or vises to **save space**. AIR-tec-Vogel® GmbH supplies these motors without housings.

At AIR-tec-Vogel® GmbH, OEMs can find air motors customized to their exact specifications. **Just talk to our experts about your application and we’ll tell you all you need to know.**

The following gearbox reductions are available from our standard range:

Reductions i = 3.8 to 7.2 and in various dimensions
Ø 24 // Ø28 // Ø42

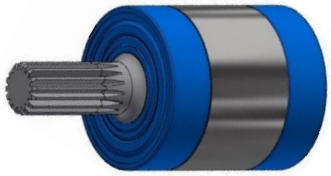

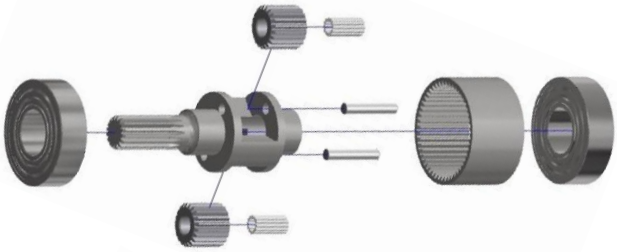

The following air motors with various wattages are available from our standard range:

Power: Ø24 = 120 to 190 watts // Ø 28 = 250 to 420 watts // Ø42 = 550 to 770 watts

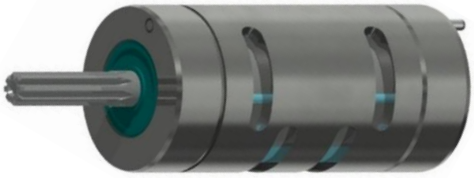

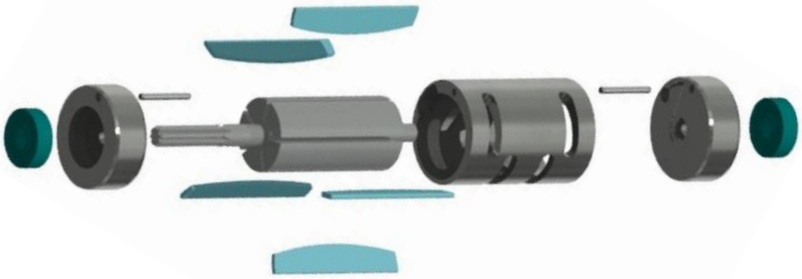

www.air-tec-vogel.de ● Email: info@air-tec-vogel.de
Phone: +49 6406/7758483 ● Fax +49 6406/7758481
AIR-tec-Vogel GmbH ● Brunnenstraße 48 ● 35460 Staufenberg (Germany)

Motor product key

Product key for AIR-tec-Vogel GmbH air motors

AT = Standard // **LAT** = Low speed // **VAT** = reinforced design

Example:

AT - RLU – AN – 300 – 1050 – 10 – FL / WF / FK / OFL= Thread / square / (special)

- OFL: Oval flange
- FK: Flange cover
- WF: Angle bracket
- FL: Flange
- 10: Supply / exhaust (to rear)
- 1050: Nominal speed rpm
- 300: Power (watts)
- AN: N = not stall-proof; A = stall-proof
- RLU: U = reversible; L = counterclockwise; R = clockwise

"All air motor series are oil-free"

Power data for operating pressure of 6.0 bar and sintered silencer.
Power increases by approx. 10-20% when operated with oiled air supply.

Please note that running noises and performance may vary depending on the silencer.

www.air-tec-vogel.de ● **Email:** info@air-tec-vogel.de
Phone: +49 6406/7758483 ● Fax +49 6406/7758481
AIR-tec-Vogel GmbH ● Brunnenstraße 48 ● 35460 Staufenberg (Germany)

Table of Contents

AT Series
Stall-proof motors
from 130 to 770 watts

LAT Series
Especially low speeds, **non** stall-proof
motors from 250 to 420 watts

VAT Series
Especially low speeds, **non** stall-proof
motors from 250 to 420 watts

Accessories

www.air-tec-vogel.de ● Email: info@air-tec-vogel.de
Phone: +49 6406/7758483 ● Fax +49 6406/7758481
AIR-tec-Vogel GmbH ● Brunnenstraße 48 ● 35460 Staufenberg (Germany)

AT-UA-120 / AT-RA-190 /

Fr max. 970 N radial shaft load
Fa max. 550 N axial shaft load

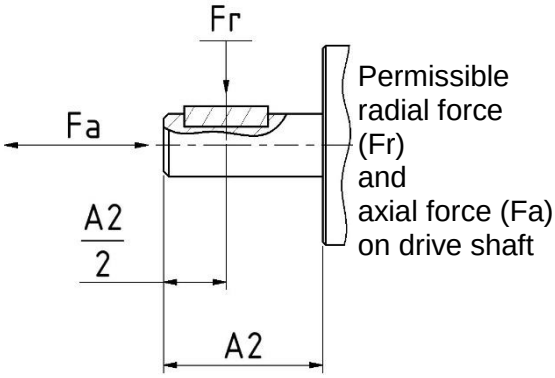

*air connection: recommended supply hose Ø mm / **inside diameter** 6.0 mm.

Our **AT series** offers a safe start even at 0.8 to 1.3 bar. These compact air motors have very high **energy efficiency** and simultaneously are space saving, robust and thus offer an excellent cost-performance ratio. (Also available in stainless steel on request)

Reversible, 120 watts, stall-proof only under certain conditions

Power in watts	Nominal speed rpm	Idle rpm	Nominal torque Nm	Stall torque Nm	Air consumption m³/min	Mass kg	Standard L in mm (-10)	Order code/ type:
120	2100	4400	0.53	1.06	0.27	0.25	92.5	AT-UA-120/2100
120	520	1040	2.20	4.4	0.27	0.35	117.5	AT-UA-120/520
120	130	260	8.7	max. 14	0.27	0.45	142.5	AT-UN-120/130

Clockwise or counterclockwise, 190 watts, stall-proof only under certain conditions

Power in watts	Nominal speed rpm	Idle rpm	Nominal torque Nm	Stall torque Nm	Air consumption m³/min	Mass kg	Standard L in mm (-10)	Order code/ type:
190	2400	4800	0.75	1.5	0.29	0.25	92.5	AT-RA-190/2400
190	580	1160	3.1	6.2	0.29	0.35	117.5	AT-RA-190/580
190	145	290	12.0	max. 14	0.29	0.45	142.5	AT-RN-190/145

Stainless steel air motors

Air motors in our **AT series** are also available in stainless steel. (Available with a range of drive spindles, motor installation types, etc.) A special feature is our shaft seal that prevents dirt particles from entering or escaping. Our stainless steel motors are primarily used in medical equipment, in the pharmaceutical and chemical industry as well as in the food industry.

***Hose inside diameters refer to a maximum hose length of 3.0 m. For lengths of more than 3.0 m, a pressure drop can be expected and a larger hose diameter may have to be selected.

Subject to technical changes **All dimensions are in mm**

AT-UA-120 / AT-RA-190 /

(K) in mm	Order code/type:
42	AT-RA-190 and UA-120/2400
67	AT-RA-190 and UA-120/580
92	AT-RN-190 and UN-120/145

Standard design

Air connections

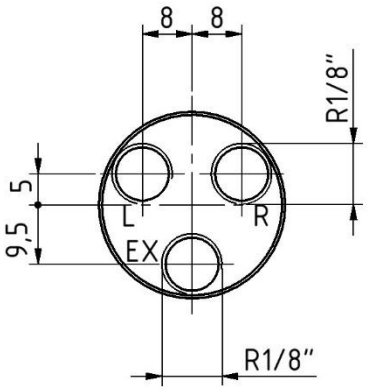

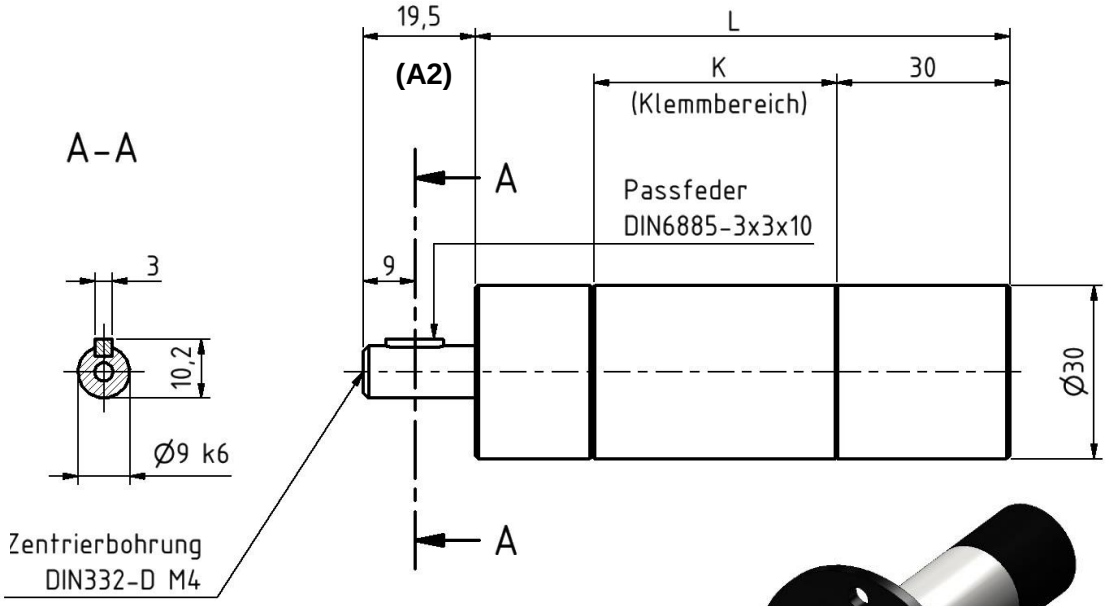

(FL) Flange design

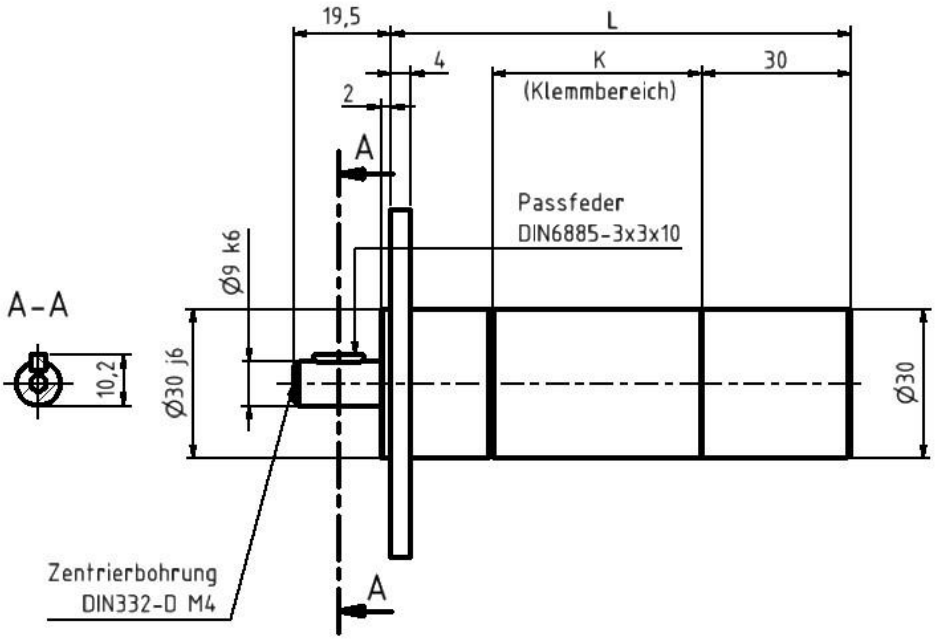

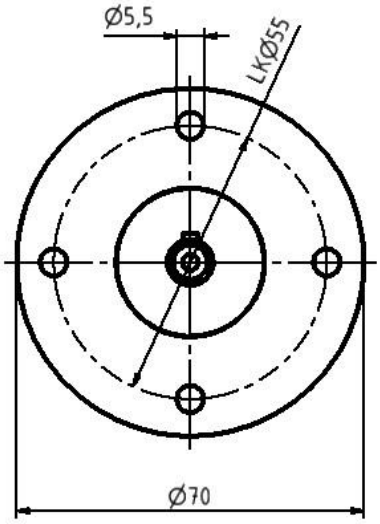

Subject to technical changes

All dimensions are in mm

AT-UA-250 / AT-RA-420 /

Fr max. 1380 N radial shaft load
Fa max. 820 N axial shaft load

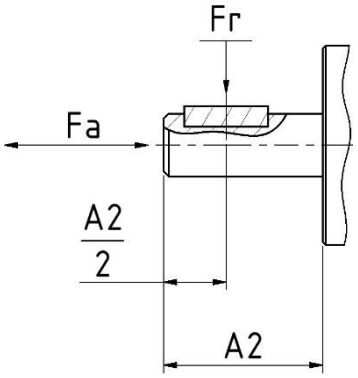

Permissible radial force (Fr) and axial force (Fa) on drive shaft

*Air connection: recommended supply hose Ø mm / **inside diameter** 8.0 mm.

Our **AT series** offers a safe start even at 1.0 to 1.5 bar. These compact air motors have very high **energy efficiency** and simultaneously are space saving, robust and thus offer an excellent cost-performance ratio. (Also available in stainless steel on request)

Reversible, 250 watts, stall-proof

Power in watts	Nominal speed rpm	Idle rpm	Nominal torque Nm	Stall torque Nm	Air consumption m³/min	Mass kg	Standard L in mm (-10)	Order code/ type:
250	2140	4280	1.1	2.2	0.36	0.56	125.5	AT-UA-250/2140
250	1210	2420	2.0	4.0	0.36	0.58	125.5	AT-UA-250/1210
250	520	1040	4.5	5.0	0.36	0.75	158.5	AT-UA-250/520
250	290	580	8.2	16.4	0.36	0.75	158.5	AT-UA-250/290

Clockwise or counterclockwise, 420 watts, stall-proof

Power in watts	Nominal speed rpm	Idle rpm	Nominal torque Nm	Stall torque Nm	Air consumption m³/min	Mass kg	Standard L in mm (-10)	Order code/ type:
420	2250	4500	1.75	3.5	0.40	0.56	125.5	AT-RA-420/2250
420	1280	2560	3.15	6.3	0.40	0.58	125.5	AT-RA-420/1280
420	550	1100	7.3	14.6	0.40	0.75	158.5	AT-RA-420/550
420	310	620	12.9	25.8	0.40	0.75	158.5	AT-RA-420/310

Stainless steel air motor

Air motors in our **AT series** are also available in stainless steel. (Available with a range of drive spindles, motor installation types, etc.) A special feature is our shaft seal that prevents dirt particles from entering or escaping. Our stainless steel motors are primarily used in medical equipment, in the pharmaceutical and chemical industry as well as in the food industry.

***** Hose inside diameters refer to a maximum hose length of 3.0 m. For lengths of more than 3.0 m, a pressure drop can be expected and a larger hose diameter may have to be selected.

Subject to technical changes **All dimensions are in mm**

AT-UA-250 / AT-RA-420 /

(K) in mm	Order code/type:
62	AT-RA-420 and UA-250/2250
62	AT-RA-420 and UA-250/1280
98	AT-RA-420 and UA-250/550
98	AT-RA-420 and UA-250/310

Standard design

Air connections

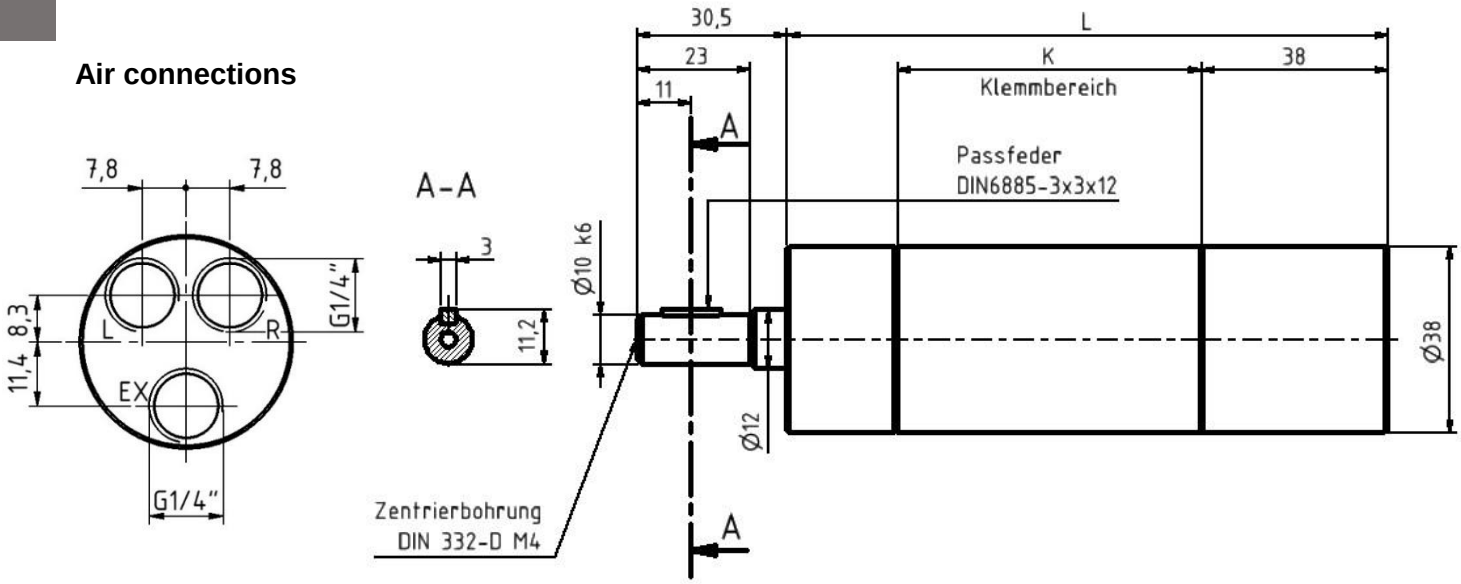

(OFL) Oval flange design

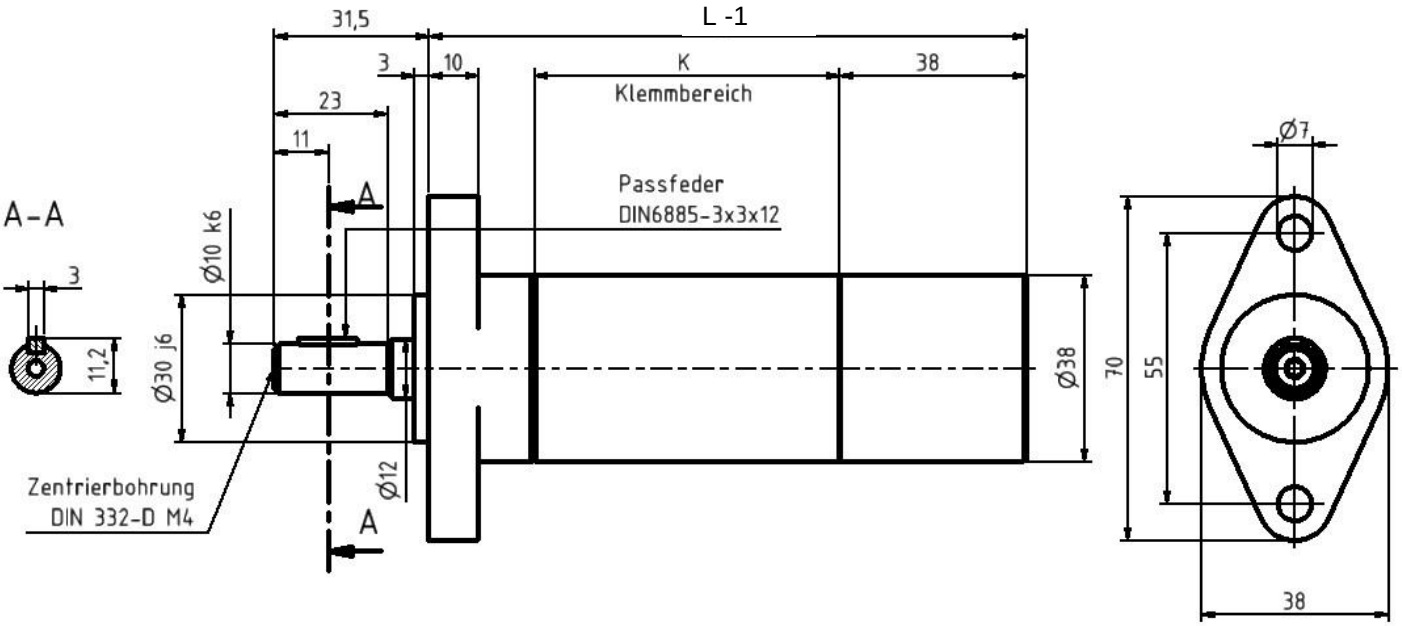

Subject to technical changes

All dimensions are in mm

AT-UA-250 / AT-RA-420 /

(FL) Flange design

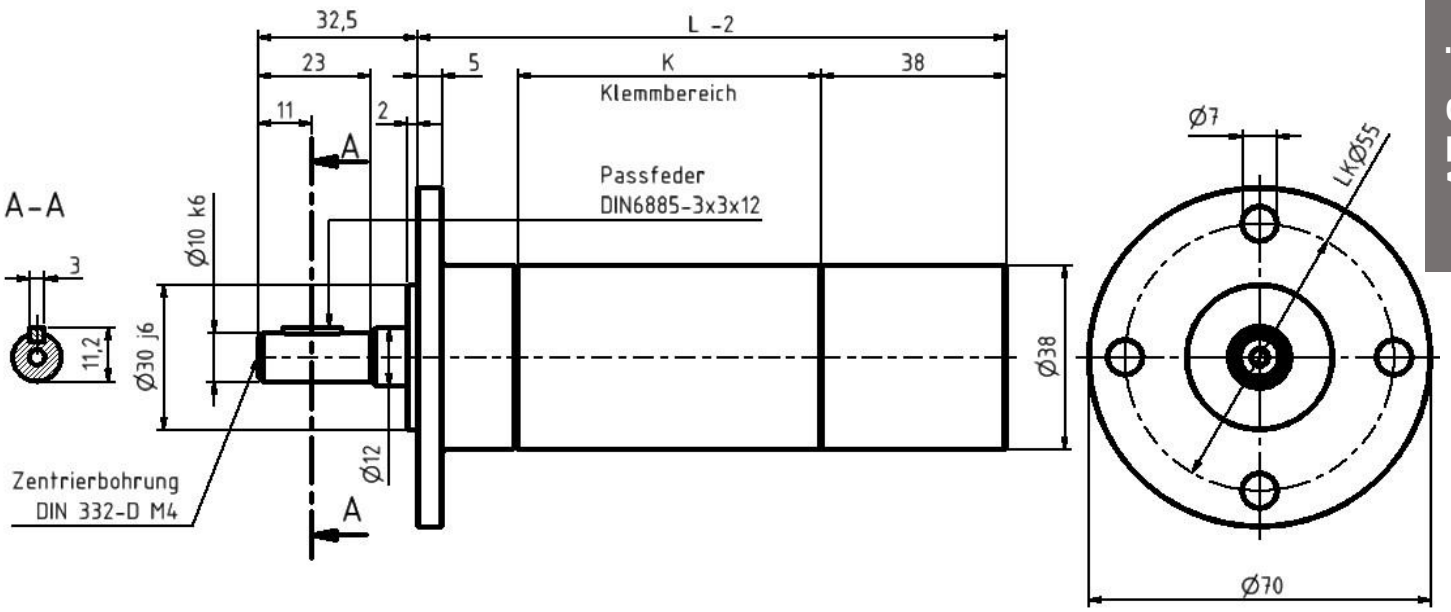

(FK) Flange cover

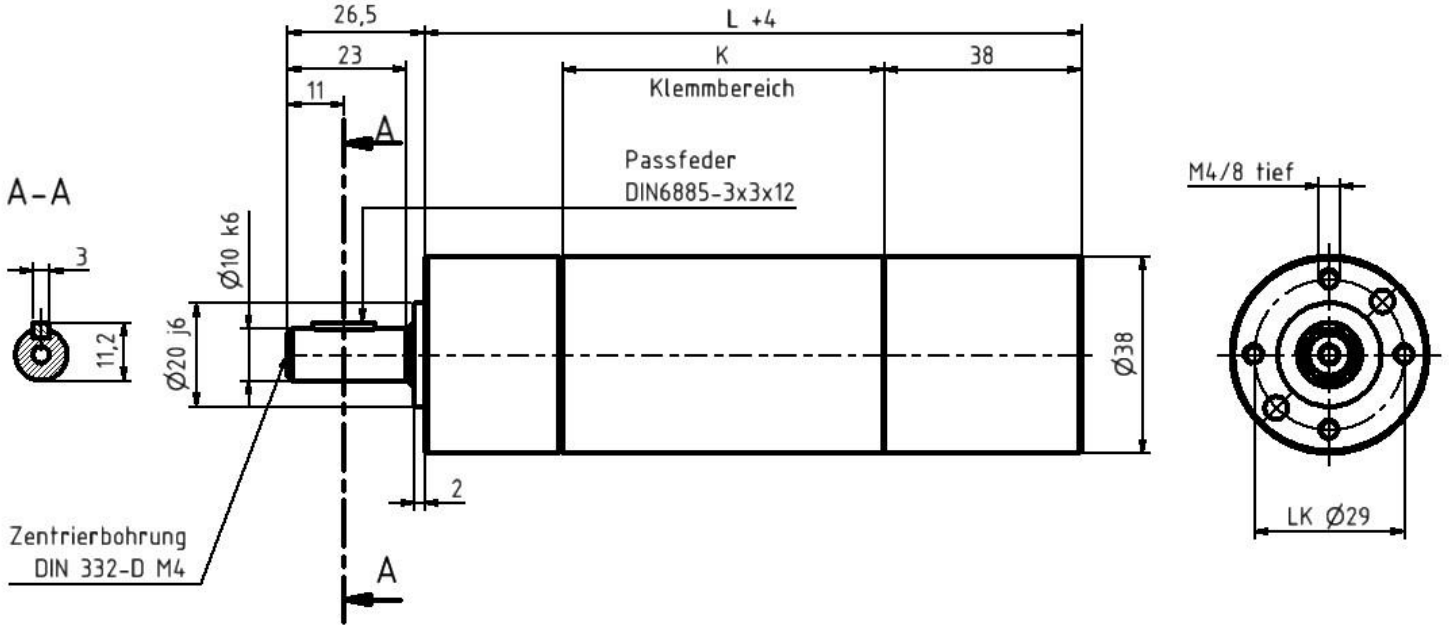

www.air-tec-vogel.de ● Email: info@air-tec-vogel.de
Phone: +49 6406/7758483 ● Fax +49 6406/7758481
AIR-tec-Vogel GmbH ● Brunnenstraße 48 ● 35460 Staufenberg (Germany)

AT-UA-250 / AT-RA-420 /

(WF) Angle bracket

Thread design 3/8“ UNF-24 threads

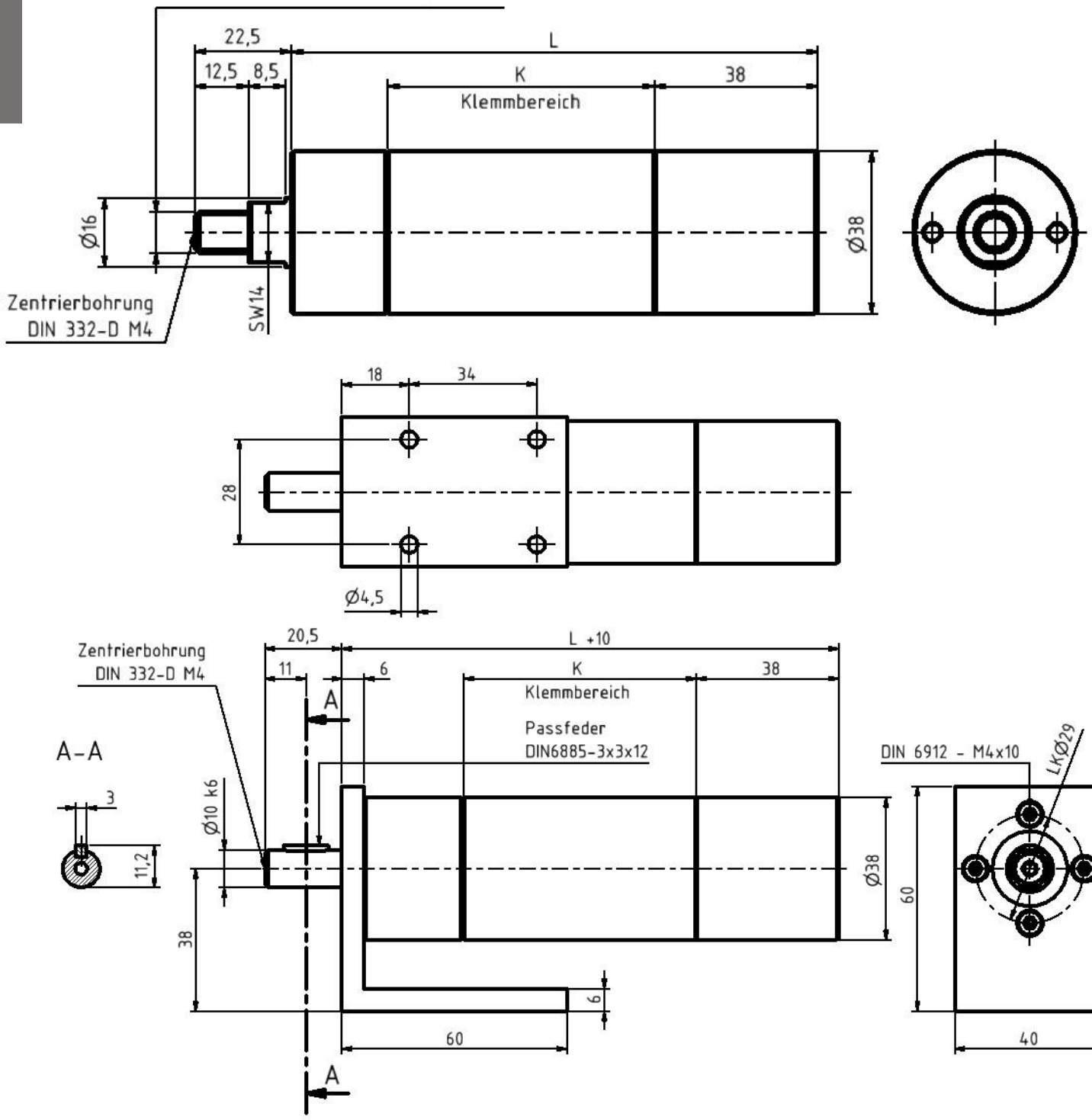

Subject to technical changes

All dimensions are in mm

AT-UA-550 / AT-RA-770 /

Fr max. 2050 N radial shaft load
Fa max. 1450 N axial shaft load

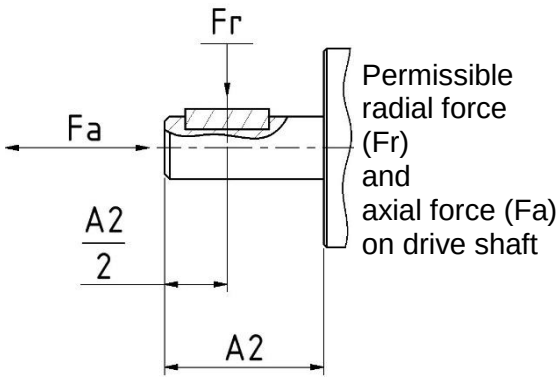

*Air connection: recommended supply hose Ø mm / **inside diameter** 13.0 mm.

Our **AT series** offers a safe start even at 1.0 to 1.5 bar. These compact air motors have very high **energy efficiency** and simultaneously are space saving, robust and thus offer an excellent cost-performance ratio. (Also available in stainless steel on request)

Reversible, 550 watts, stall-proof

Power in watts	Nominal speed rpm	Idle rpm	Nominal torque Nm	Stall torque Nm	Air consumption m³/min	Mass kg	Standard L in mm (-10)	Order code/ type:
550	1680	3360	3.12	6.24	0.82	1.35	138.5	AT-UA-550/1680
550	1460	2920	3.6	7.2	0.82	1.35	138.5	AT-UA-550/1460
550	1230	2460	4.3	8.6	0.82	1.35	138.5	AT-UA-550/1230
550	435	870	12	24	0.82	1.75	182.5	AT-UA-550/435
550	380	760	13.8	27.6	0.82	1.75	182.5	AT-UA-550/380
550	330	660	15.9	31.8	0.82	1.75	182.5	AT-UA-550/330
550	275	550	19.0	38	0.82	1.75	182.5	AT-UA-550/275

Clockwise or counterclockwise, 770 watts, stall-proof

Power in watts	Nominal speed rpm	Idle rpm	Nominal torque Nm	Stall torque Nm	Air consumption m³/min	Mass kg	Standard L in mm (-10)	Order code/ type:
770	1850	3700	3.98	6.96	0.9	1.35	138.5	AT-RA-770/1850
770	1615	3230	4.6	9.2	0.9	1.35	138.5	AT-RA-770/1615
770	1350	2700	5.4	10.8	0.9	1.35	138.5	AT-RA-770/1350
770	480	960	15.3	30.6	0.9	1.75	182.5	AT-RA-770/480
770	420	840	17.5	35	0.9	1.75	182.5	AT-RA-770/420
770	360	720	18.8	37.6	0.9	1.75	182.5	AT-RA-770/360
770	300	600	24.5	49.0	0.9	1.75	182.5	AT-RA-770/300

***** Hose inside diameters refer to a maximum hose length of 3.0 m. For lengths of more than 3.0 m, a pressure drop can be expected and a larger hose diameter may have to be selected.

Subject to technical changes **All dimensions are in mm**

AT-UA-550 / AT-RA-770 /

(K) in mm	Order code/type:
70	AT-RA-770 and UA-550/1850
70	AT-RA-770 and UA-550/1615
70	AT-RA-770 and UA-550/1350
114	AT-RA-770 and UA-550/480
114	AT-RA-770 and UA-550/420
114	AT-RA-770 and UA-550/360
114	AT-RA-770 and UA-550/300

Air connections

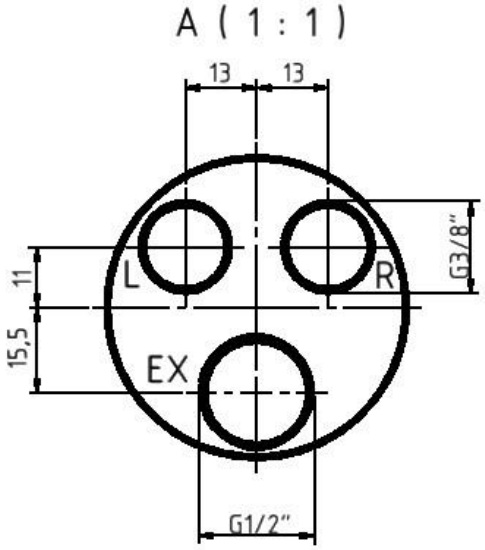

Standard design

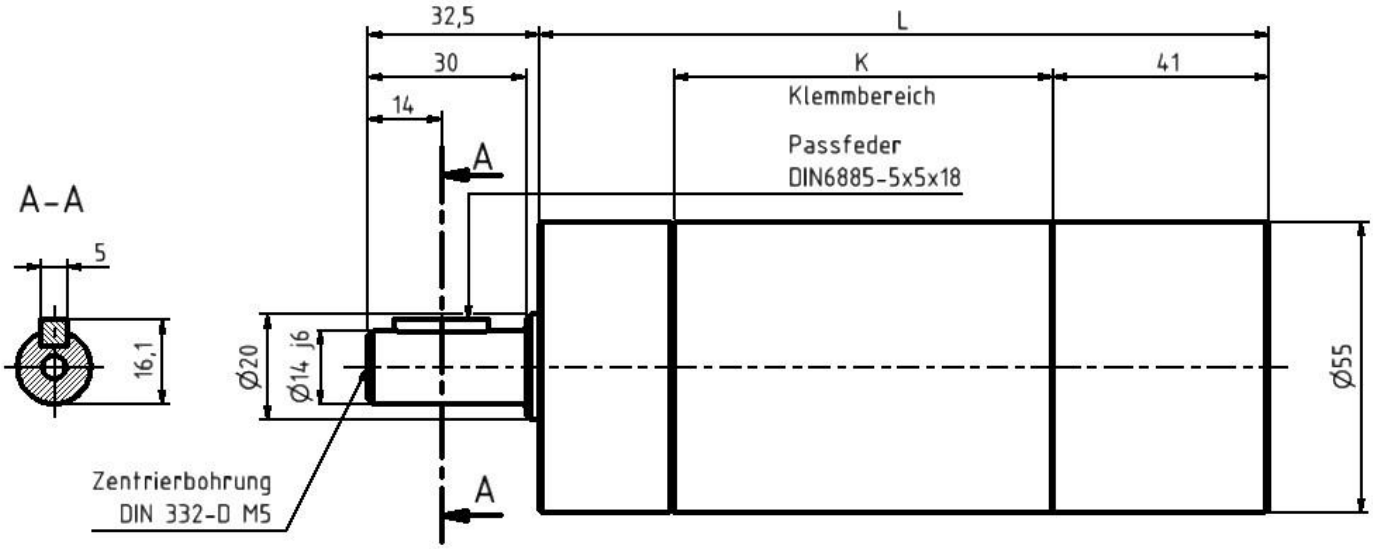

Subject to technical changes

All dimensions are in mm

(OFL) Oval flange design

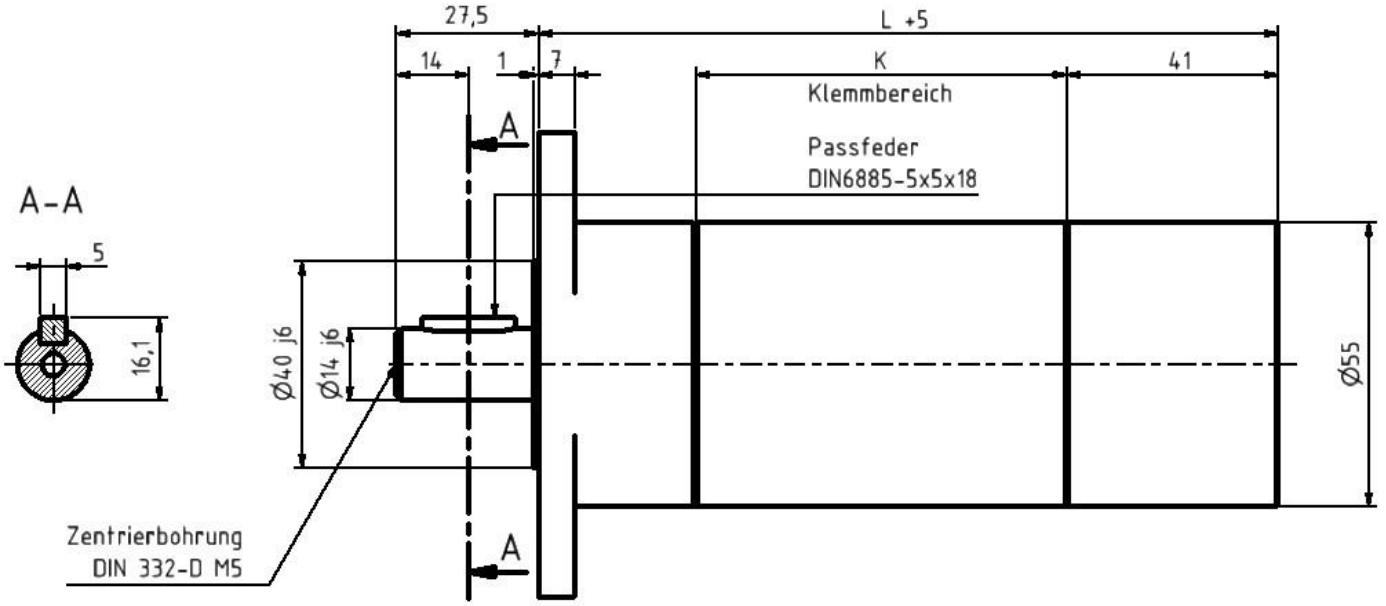

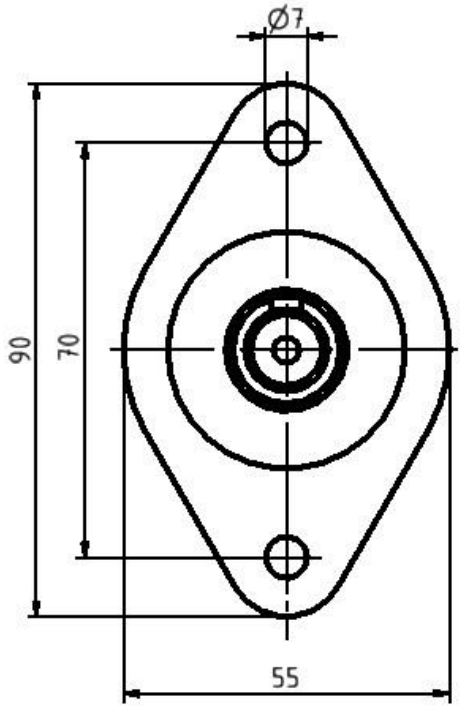

www.air-tec-vogel.de ● Email: info@air-tec-vogel.de
Phone: +49 6406/7758483 ● Fax +49 6406/7758481
AIR-tec-Vogel GmbH ● Brunnenstraße 48 ● 35460 Staufenberg (Germany)

AT-UA-550 / AT-RA-770 /

PLEASE NOTE:
Use M5 DIN 912 Allen® head screws, quality class 10.9.

(FL) Flange design

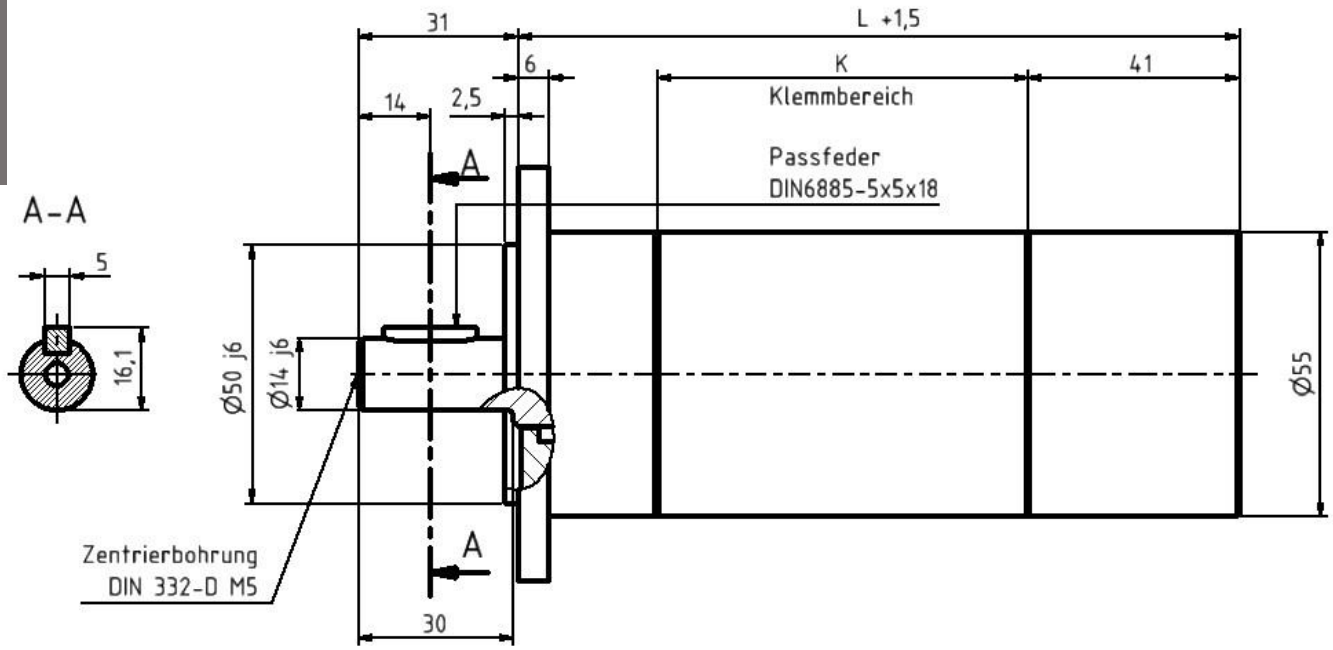

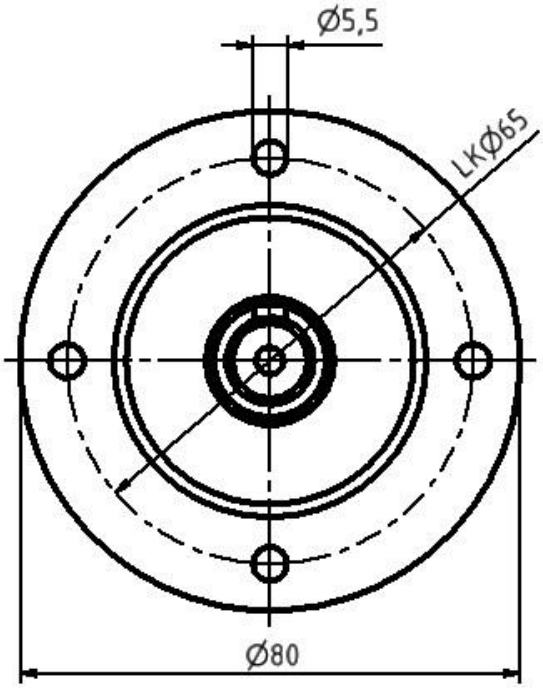

Subject to technical changes

All dimensions are in mm

www.air-tec-vogel.de ● Email: info@air-tec-vogel.de
Phone: +49 6406/7758483 ● Fax +49 6406/7758481
AIR-tec-Vogel GmbH ● Brunnenstraße 48 ● 35460 Staufenberg (Germany)

LAT-UN-250 / LAT-RN-420 /

Fr max. 1320 N radial shaft load
Fa max. 820 N axial shaft load

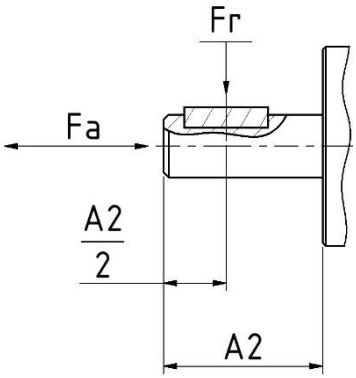

Permissible radial force (Fr) and axial force (Fa) on drive shaft

*Air connection: recommended supply hose Ø mm / **inside diameter** LW 8.0 mm.

Motors in the **"LAT series"** have **"especially low speeds"** and loads must not exceed a **maximum torque**. To prevent damage, we recommend that you install safety clutches or torque limiters. A special feature is our shaft seal that keeps dirt particles from entering and escaping.

Reversible, 250 watts, not stall-proof, "especially low speeds"

Power in watts	Nominal speed rpm	Idle rpm	Nominal torque Nm	Stall torque Nm	Air consumption m³/min	Mass kg	Standard L in mm (-10)	Order code/ type:
250	125	250	19.0	max. 30	0.36	0.95	191.5	LAT-UN-250/125
250	72	144	max. 30	max. 30	0.36	0.95	191.5	LAT-UN-250/72
250	40	80	max. 30	max. 30	0.36	0.95	191.5	LAT-UN-250/40
250	22	44	max. 30	max. 30	0.36	0.95	191.5	LAT-UN-250/22

Clockwise or counterclockwise, 420 watts, not stall-proof, "especially low speeds"

Power in watts	Nominal speed rpm	Idle rpm	Nominal torque Nm	Stall torque Nm	Air consumption m³/min	Mass kg	Standard L in mm (-10)	Order code/ type:
420	130	260	max. 30	max. 30	0.40	0.95	191.5	LAT-RN-420/130
420	75	150	max. 30	max. 30	0.40	0.95	191.5	LAT-RN-420/72
420	42	84	max. 30	max. 30	0.40	0.95	191.5	LAT-RN-420/42
420	24	48	max. 30	max. 30	0.40	0.95	191.5	LAT-RN-420/24

***** Hose inside diameters refer to a maximum hose length of 3.0 m. For lengths of more than 3.0 m, a pressure drop can be expected and a larger hose diameter may have to be selected.

Subject to technical changes **All dimensions are in mm**

LAT-UN-250 / LAT-RN-420 /

(K) in mm	Order code/type:
130	LAT-RN-420 and UN-250/130
130	LAT-RN-420 and UN-250/72
130	LAT-RN-420 and UN-250/42
130	LAT-RN-420 and UN-250/24

Standard design

Air connections

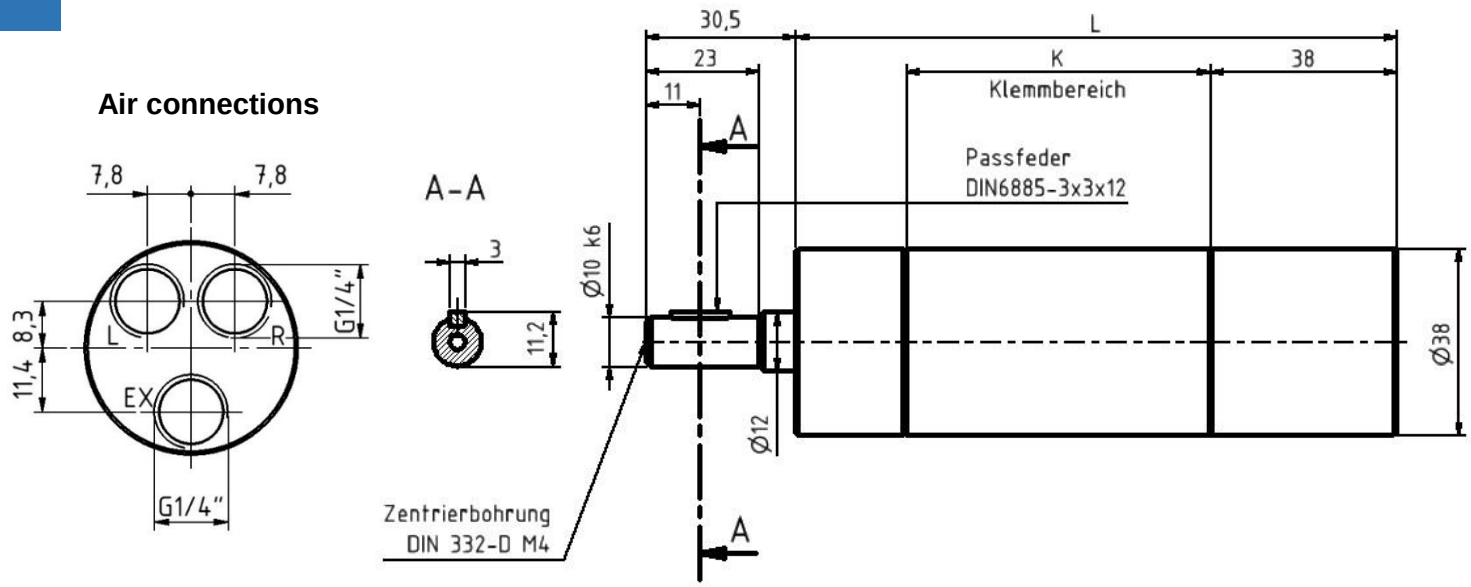

(OFL) Oval flange design

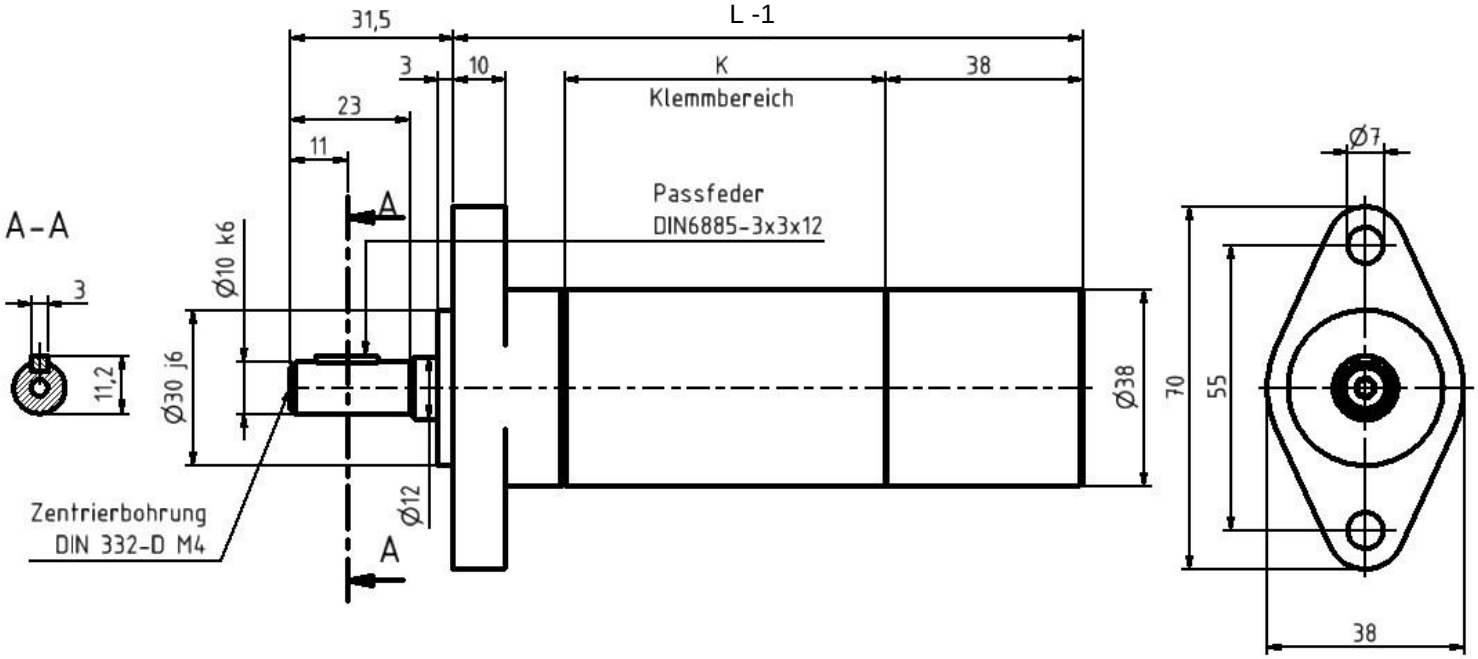

Subject to technical changes

All dimensions are in mm

LAT-UN-250 / LAT-RN-420 /

(FL) Flange design

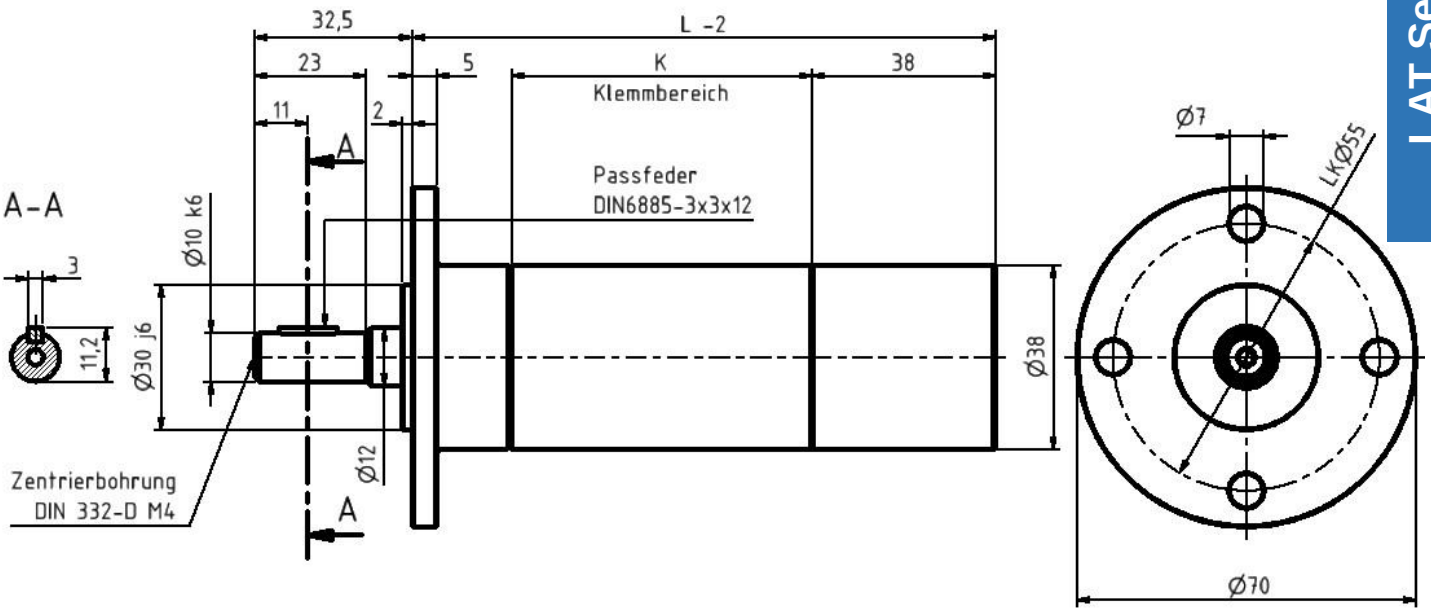

(FK) Flange cover

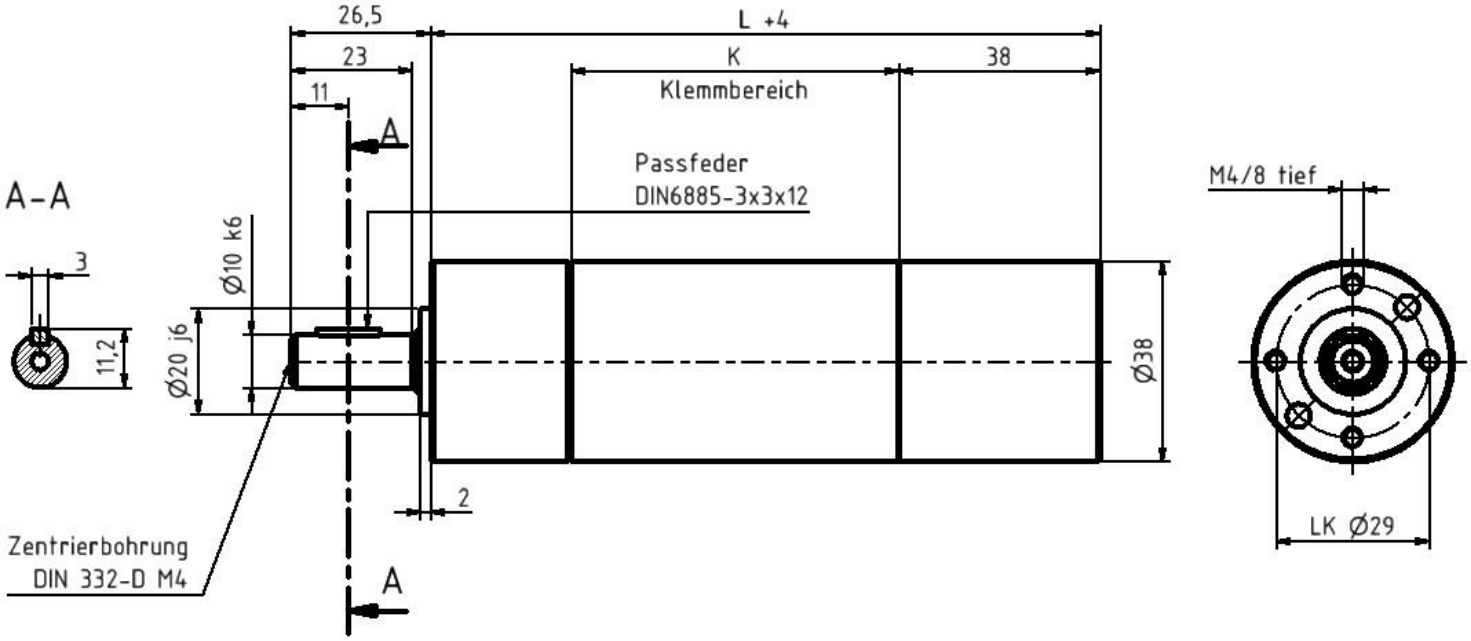

www.air-tec-vogel.de ● Email: info@air-tec-vogel.de
Phone: +49 6406/7758483 ● Fax +49 6406/7758481
AIR-tec-Vogel GmbH ● Brunnenstraße 48 ● 35460 Staufenberg (Germany)

(WF) Angle bracket

LAT-UN-250 / LAT-RN-420 /

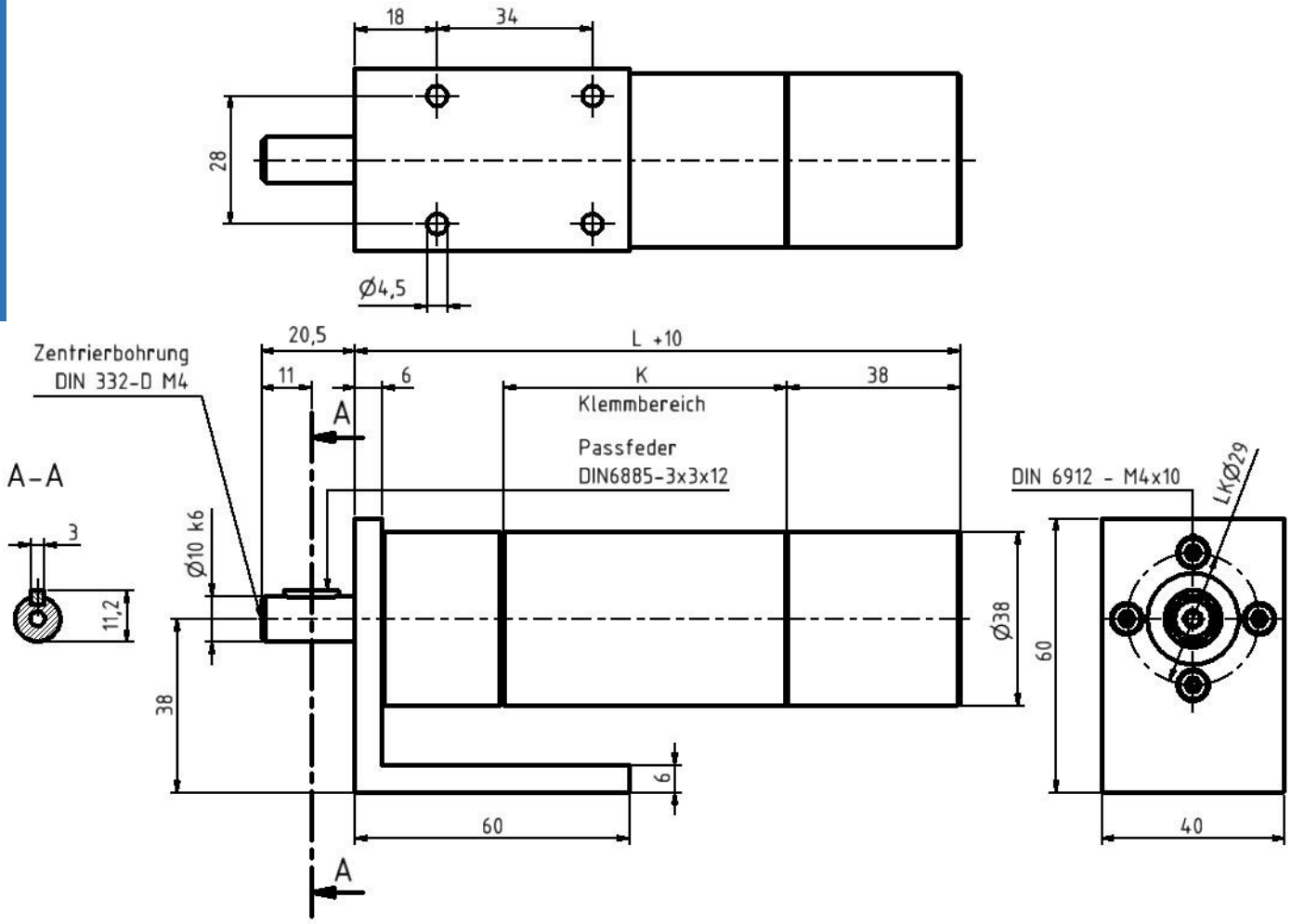

Thread design 3/8“ UNF-24 threads

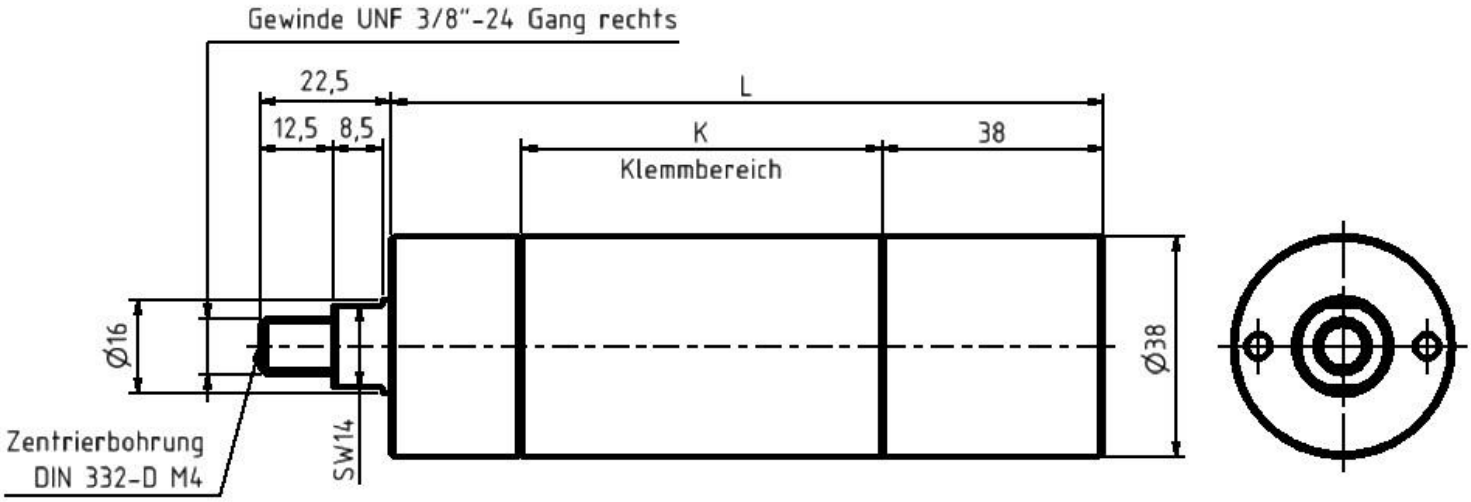

www.air-tec-vogel.de ● Email: info@air-tec-vogel.de
Phone: +49 6406/7758483 ● Fax +49 6406/7758481
AIR-tec-Vogel GmbH ● Brunnenstraße 48 ● 35460 Staufenberg (Germany)

LAT-UA-550 / LAT-RA-770 /

Fr max. 2050 N radial shaft load
Fa max. 1450 N axial shaft load

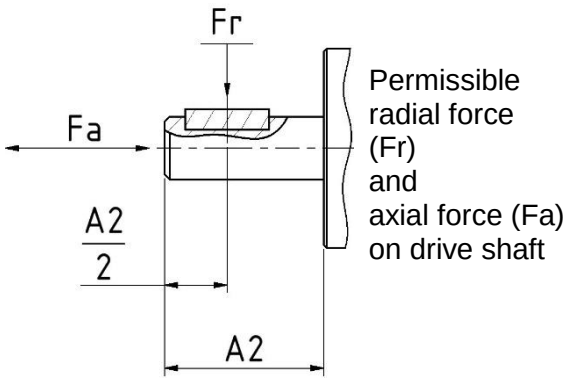

*Air connection: recommended supply hose Ø mm / **inside diameter** 13.0 mm.

Motors in the **"LAT series"** have **"especially low speeds"** and loads must not exceed a **maximum torque**. To prevent damage, we recommend that you install safety clutches or torque limiters. A special feature is our shaft seal that keeps dirt particles from entering and escaping.

Reversible, 550 watts, not stall-proof, "especially low speeds"

Power in watts	Nominal speed rpm	Idle rpm	Nominal torque Nm	Stall torque Nm	Air consumption m³/min	Mass kg	Standard L in mm (-10)	Order code/ type:
550	114	228	46.0	max. 60	0.82	1.75	224.5	LAT-UN-550/114
550	75	150	max. 60	max. 60	0.82	1.75	224.5	LAT-UN-550/75
550	63	126	max. 60	max. 60	0.82	1.75	224.5	LAT-UN-550/63
550	53	106	max. 60	max. 60	0.82	1.75	224.5	LAT-UN-550/53
550	44	88	max. 60	max. 60	0.82	1.75	224.5	LAT-UN-550/44
550	14	28	max. 60	max. 60	0.82	2.9	267.5	LAT-UN-550/14

Clockwise or counterclockwise, 770 watts, not stall-proof, "especially low speeds"

Power in watts	Nominal speed rpm	Idle rpm	Nominal torque Nm	Stall torque Nm	Air consumption m³/min	Mass kg	Standard L in mm (-10)	Order code/ type:
770	125	250	58	max. 60	0.9	1.75	224.5	LAT-RN-770/125
770	83	166	max. 60	max. 60	0.9	1.75	224.5	LAT-RN-770/83
770	69	138	max. 60	max. 60	0.9	1.75	224.5	LAT-RN-770/69
770	58	116	max. 60	max. 60	0.9	1.75	224.5	LAT-RN-770/58
770	49	98	max. 60	max. 60	0.9	1.75	224.5	LAT-RN-770/49
770	15	30	max. 60	max. 60	0.9	2.9	267.5	LAT-RN-770/15

***** Hose inside diameters refer to a maximum hose length of 3.0 m. For lengths of more than 3.0 m, a pressure drop can be expected and a larger hose diameter may have to be selected.

Subject to technical changes **All dimensions are in mm**

LAT-UA-550 / LAT-RA-770 /

(K) (K) in mm	Order code/type:
158	LAT-RN-770 und UN-550/125
158	LAT-RN-770 und UN-550/83
158	LAT-RN-770 und UN-550/69
158	LAT-RN-770 und UN-550/58
158	LAT-RN-770 und UN-550/49
158	LAT-RN-770 und UN-550/15

Air connections

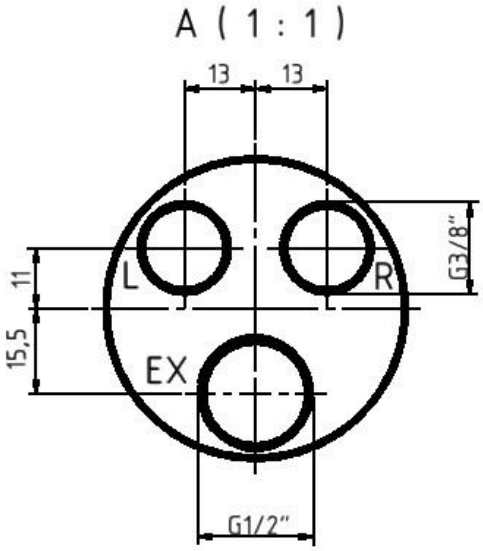

Standard design

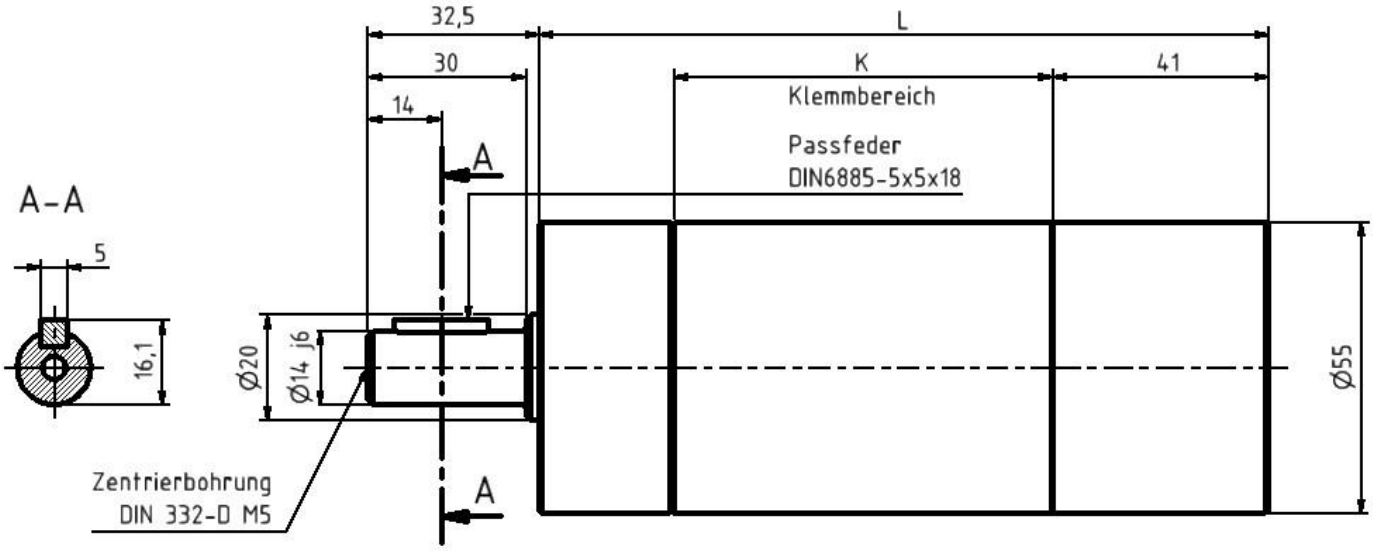

Subject to technical changes

All dimensions are in mm

LAT-UN-550 / LAT-RN-770 /

(OFL) Oval flange

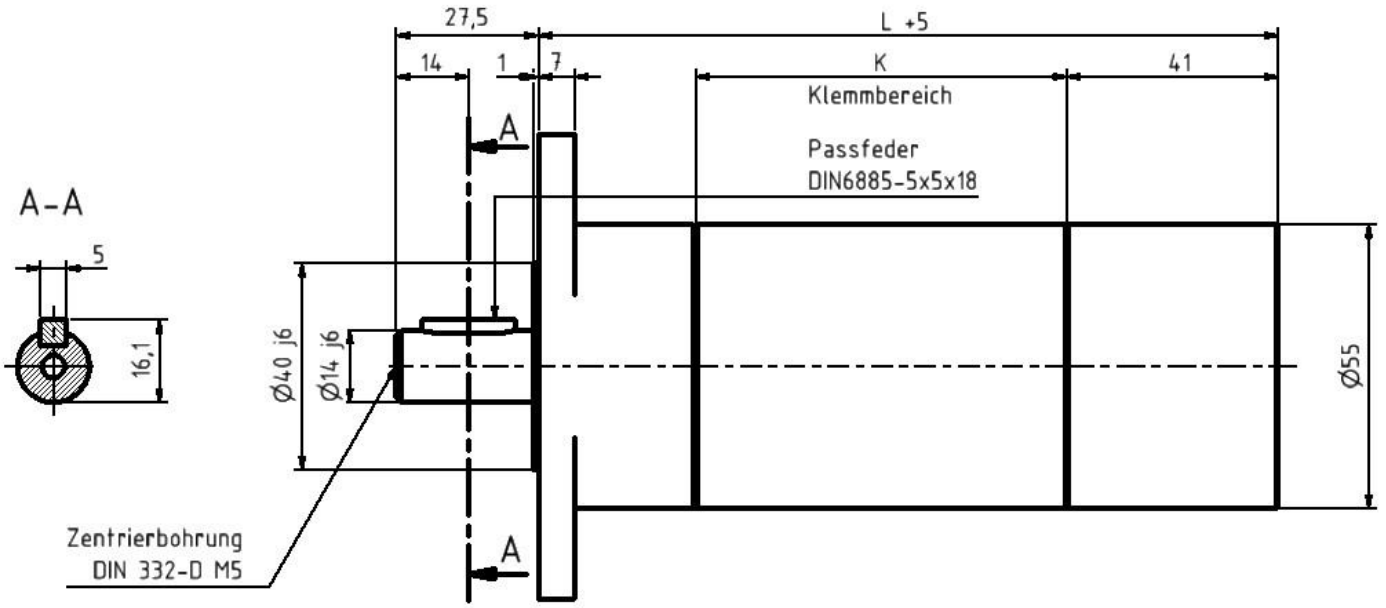

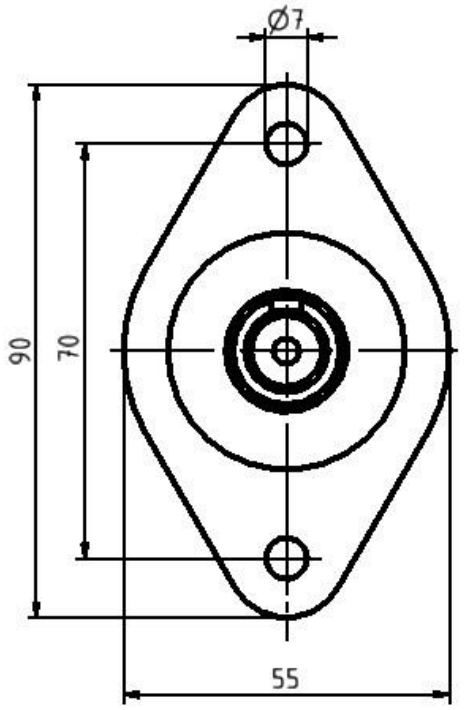

www.air-tec-vogel.de ● Email: info@air-tec-vogel.de
Phone: +49 6406/7758483 ● Fax +49 6406/7758481
AIR-tec-Vogel GmbH ● Brunnenstraße 48 ● 35460 Staufenberg (Germany)

LAT-UN-550 / LAT-RN-770 /

PLEASE NOTE:
Use M5 DIN 912 Allen® head screws, quality class 10.9!

(FL) Flange design

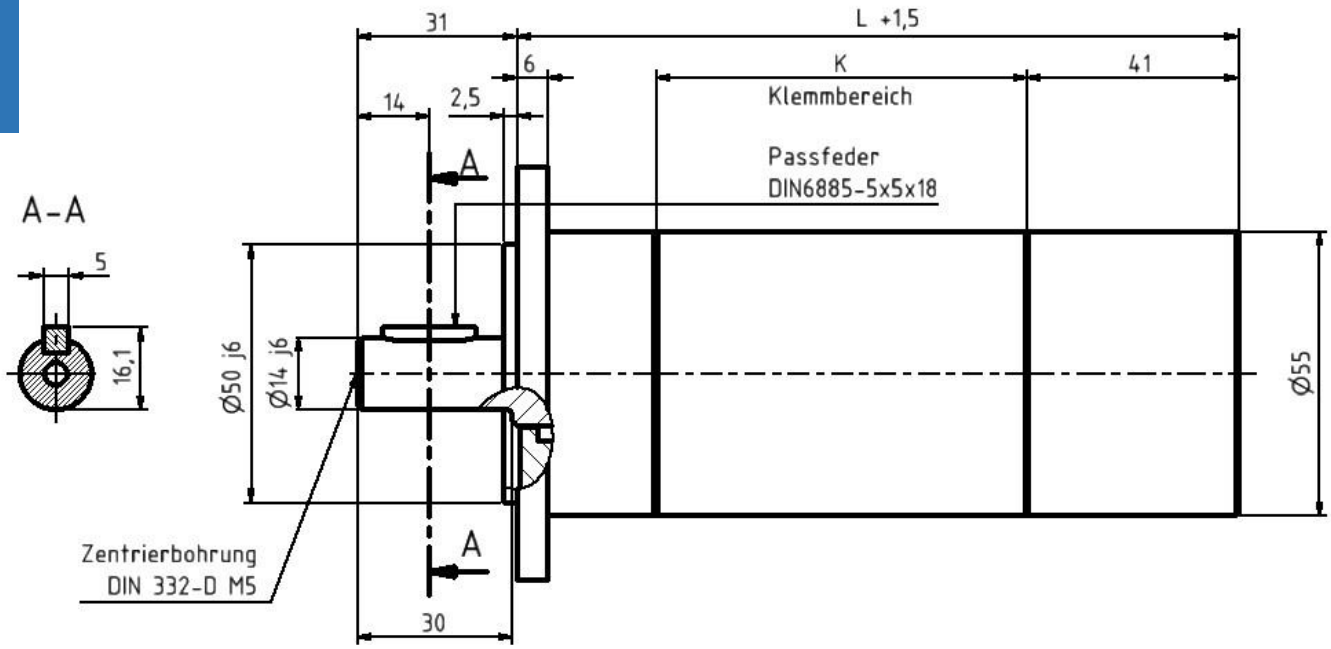

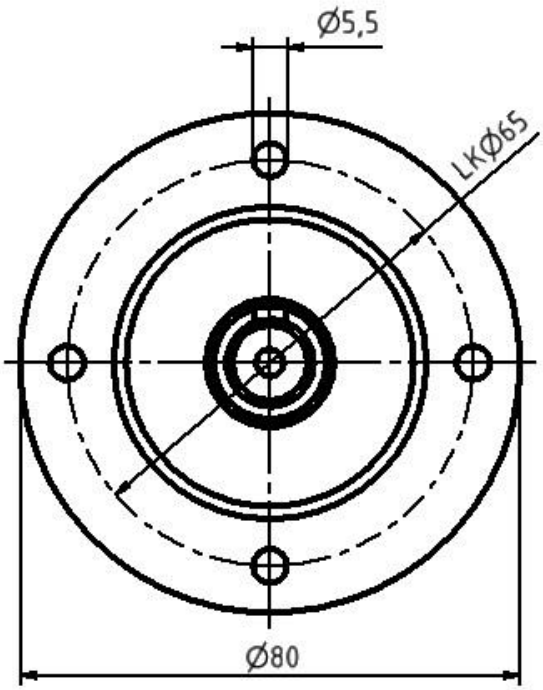

www.air-tec-vogel.de ● Email: info@air-tec-vogel.de
Phone: +49 6406/7758483 ● Fax +49 6406/7758481
AIR-tec-Vogel GmbH ● Brunnenstraße 48 ● 35460 Staufenberg (Germany)

VAT-UN-250 / AT-RN-420 /

Fr max. 2050 N radial shaft load
Fa max. 1450 N axial shaft load

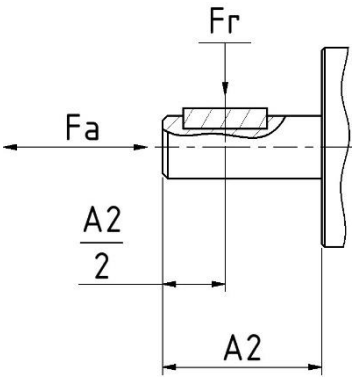

Permissible radial force (Fr) and axial force (Fa) on drive shaft

*Air connection: recommended supply hose Ø mm / **inside diameter** 8.0 mm.

Motors in the **"VAT series"** are engines with a **reinforced gearbox**. Loads must not exceed a **maximum torque**. In spite of their high torque, these motors have very low air consumption and an excellent cost-performance ratio. A special feature is our shaft seal that prevents dirt particles from entering or escaping.

Reversible, 250 watts, stall-proof only under certain conditions, "especially low speeds"

Power in watts	Nominal speed rpm	Idle rpm	Nominal torque Nm	Stall torque Nm	Air consumption m³/min	Mass kg	Standard L in mm (-10)	Order code/ type:
250	485	970	4.9	9.8	0.36	1.25	169	VAT-UA-250/485
250	120	240	19	38	0.36	1.4	205	VAT-UA-250/120
250	62	124	38	max. 60	0.36	1.6	211	VAT-UN-250/62

Clockwise or counterclockwise, 420 watts, not stall-proof, "especially low speeds"

Power in watts	Nominal speed rpm	Idle rpm	Nominal torque Nm	Stall torque Nm	Air consumption m³/min	Mass kg	Standard L in mm (-10)	Order code/ type:
420	500	1000	8	16	0.40	1.25	169	VAT-RA-420/500
420	125	260	32	max. 60	0.40	1.4	205	VAT-RN-420/125
420	65	150	max. 60	max. 60	0.40	1.6	211	VAT-RN-420/65

***** Hose inside diameters refer to a maximum hose length of 3.0 m. For lengths of more than 3.0 m, a pressure drop can be expected and a larger hose diameter may have to be selected.

Subject to technical changes **All dimensions are in mm**

VAT-UN250 / VAT-RN-420 /

(K) in mm	Order code/type:
62	VAT-RA-420 and UA-250/1000
98	VAT-RN-420 and UA-250/125
62	VAT-RN-420 and UN-250/65

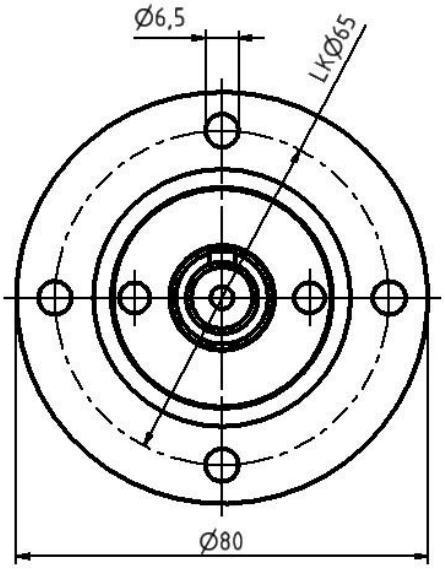

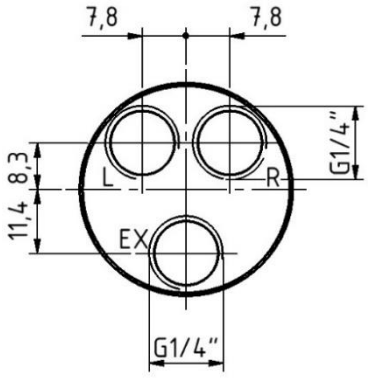

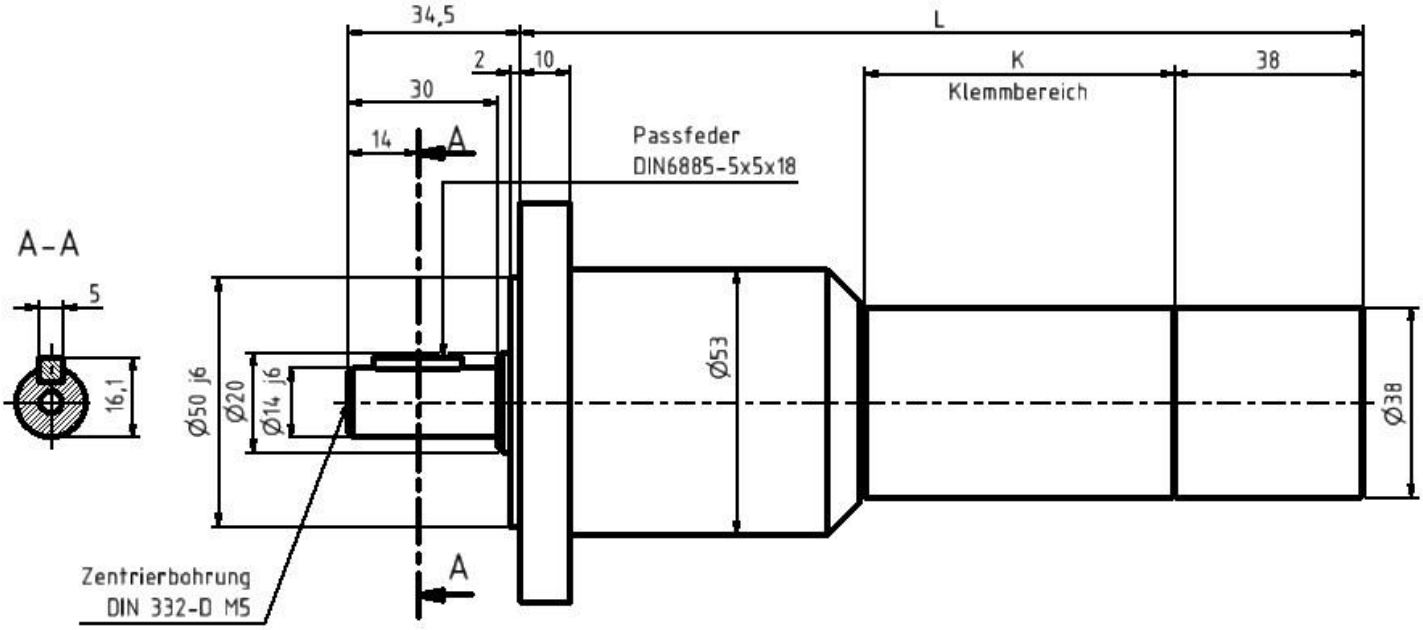

www.air-tec-vogel.de ● Email: info@air-tec-vogel.de
Phone: +49 6406/7758483 ● Fax +49 6406/7758481
AIR-tec-Vogel GmbH ● Brunnenstraße 48 ● 35460 Staufenberg (Germany)

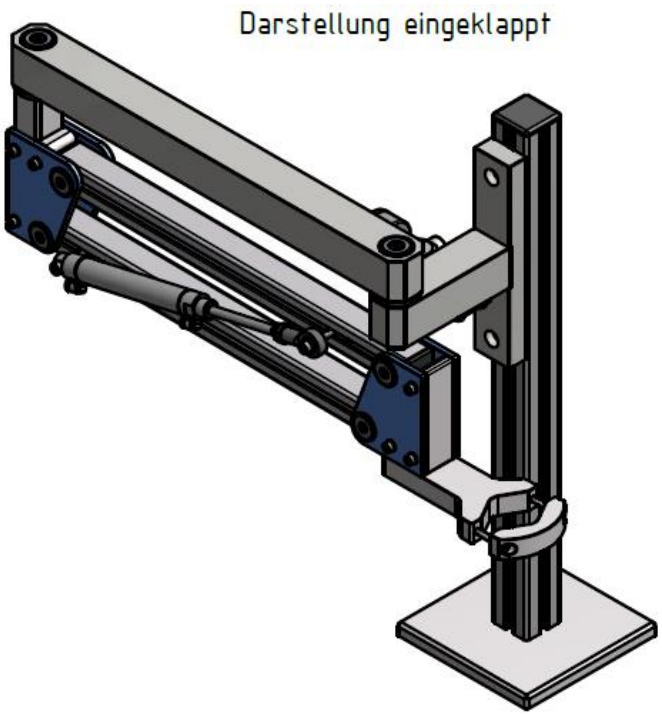

The ergonomic "**Ergo-Lift**" support arm made by AIR-tec-Vogel® GmbH relieves workers from reaction and weight forces from air motors, mechanical screwdrivers, drills, riveting machines and other tools. Its universal prism tool holder can be modified or adapted to customer requirements. The three sizes for torques of up to 50 Nm, 150 Nm and 300 Nm are achieved by changes in profile sizes and different pneumatic cylinders. All "**Ergo-Lift**" joints are equipped with deep-groove ball bearings and are completely clearance-free and can be furnished with a 3D positioning system for position monitoring. The system's extraordinary rigidity is achieved through the profile design. We only recommend the standard prism holder (up to Ø 55mm) for torques of no more than 15 Nm (other holders can be customized to your requirements).

„Ergo-Lift" in combination with compressed-air thread cutting machines from M3 to M12 incl. **f**ast reverse.

Option: Profiles, weight load and leg length can be adjusted at any time.

Type	Torque	Load capacity	Working range	Aluminum profile
Ergolift 50	max.50	up to 1.5 kg	radius 950	40x40, 30x30 mm
Ergolift 150	max.150	up to 15 kg	radius 1200	80x40, 40x40 mm
Ergolift 300	max.300	up to 30 kg	radius 1500	120x60, 60x60 mm

www.air-tec-vogel.de ● Email: info@air-tec-vogel.de
Phone: +49 6406/7758483 ● Fax +49 6406/7758481
AIR-tec-Vogel GmbH ● Brunnenstraße 48 ● 35460 Staufenberg (Germany)

How to find us

Production ● Distribution ● Design ● Service

AIR-tec-Vogel® GmbH ● D-35460 Staufenberg
Phone: +49 (0) 6406/7758483
Fax: +49 (0) 6406/7758481
Email: info@air-tec-vogel.de
www.air-tec-vogel.de

Your AIR-tec-Vogel® GmbH partner

12/12/2020 Issue

All rights reserved. Unauthorized use of texts or copying of content, in particular photographs, model designations, part numbers and trademarks, is prohibited. Reproduction, in whole or in part, as well as mechanical and digital copying require the prior express written consent of **AIR-tec-Vogel® GmbH**.